Finite element-based optimization of composite wrap repair for welded pipelines with surface cracks: influence of geometry, adhesive properties, and internal pressure on mode I fracture behavior

Nedir Hachemi[a], *Noureddine* Mahmoudi[b], *Foudil* Khelil[c], *Abed* Bouadi[d], *Youcef* Moulai Arbi[e]

[a] University of Mustapha Stambouli, Laboratory of Quantum Physics of Matter and Mathematical Modeling (LPQ3M), Mascara, People's Democratic Republic of Algeria,

e-mail: nedirhachemidz@gmail.com, **corresponding author**,

ORCID ID: https://orcid.org/0009-0008-2211-0776

[b] University of Saida Dr. Moulay Tahar, Faculty of Technology, Department of Civil Engineering and Hydraulics, Saida, People's Democratic Republic of Algeria,

e-mail: mahmoudi.noureddine@yahoo.fr,

ORCID ID: https://orcid.org/0000-0002-9740-0857

[c] University of Mustapha Stambouli, Laboratory of Quantum Physics of Matter and Mathematical Modeling (LPQ3M), Mascara, People's Democratic Republic of Algeria,

e-mail: khelilfoudil@yahoo.com,

ORCID ID: https://orcid.org/0000-0002-1671-0766

[d] University of Mustapha Stambouli, Mascara, People's Democratic Republic of Algeria,

e-mail: bouadi.abed@gmail.com,

ORCID ID: https://orcid.org/0000-0003-2378-0292

[e] University of Mustapha Stambouli, Laboratory of Quantum Physics of Matter and Mathematical Modeling (LPQ3M), Mascara, People's Democratic Republic of Algeria,

e-mail: youcef.moulaiarbi@univ-mascara.dz,

ORCID ID: https://orcid.org/0000-0002-6534-8820

https://doi.org/10.5937/vojtehg74-59078

FIELD: mechanical engineering, materials
ARTICLE TYPE: original scientific paper

Abstract:

Introduction/purpose: The structural integrity of pressurized pipelines is often threatened by surface cracks, especially in welded regions. This study evaluates the effectiveness of composite wrap reinforcement in repairing longitudinal semi-elliptical cracks in welded steel pipelines subjected to

ONLINE FIRST

internal pressure. Although environmental effects such as temperature, moisture, and chemical exposure were not modeled, they are acknowledged as key factors influencing the long-term durability of composite repairs.

Methods: A three-dimensional finite element model was developed for a welded pipeline (outer diameter = 1016 mm, thickness = 12.8 mm) containing an external semi-elliptical crack (2c = 10.24 mm, a = 2.56 mm). The Virtual Crack Closure Technique (VCCT) was applied to compute Mode I Stress Intensity Factors (SIFs) under internal pressures of 2–12 MPa. A parametric study assessed the influence of patch length (100–400 mm), thickness (6–12 mm), and circumferential coverage angle (30°–360°), as well as adhesive shear modulus, thickness, and debonding effects.

Results: Increasing patch length, thickness, and coverage angle reduced SIFs, improving crack-tip stress attenuation. A higher adhesive shear modulus enhanced interfacial load transfer, while excessive adhesive thickness impaired efficiency. Localized adhesive debonding significantly increased SIFs under pressure, highlighting the sensitivity of repair performance to bonding quality.

Conclusions: This study provides design insights for optimizing composite reinforcement in welded pipeline repairs. Although a rectangular patch was analyzed, future work should investigate alternative geometries to mitigate edge stress concentrations and incorporate fatigue and environmental effects to better predict long-term service performance.

Key words: pipeline weld repair, composite wrap reinforcement, stress intensity factor (SIF), crack propagation, finite element eethod (FEM).

Introduction

Pipelines are a critical component of modern infrastructure, providing a safe, efficient, and cost-effective means of transporting liquids, gases, and solids over long distances (Klass et al., 2014). They are widely used across various sectors such as oil and gas, water supply, chemical processing, and power generation, ensuring continuous flow and reducing dependence on traditional transportation methods like trucking and railways (Baghban et al., 2022). Pipelines are typically categorized based on their function: those transporting crude oil and refined petroleum products, natural gas distribution lines, water and wastewater conveyance systems, as well as industrial pipelines used for the transfer of chemicals and slurry mixtures (Sontti et al., 2023). Their significance lies in their ability to support economic growth, reduce transportation costs, minimize environmental impacts, and ensure the safe handling of hazardous materials (Qu et al., 2022). Stainless steel pipelines are particularly valued for their corrosion resistance, mechanical strength, and long-term

ONLINE FIRST

durability, making them ideal for applications requiring high-performance materials (Berkache, 2021).

However, welding defects such as cracks remain a major challenge in pipeline construction and maintenance, posing threats to structural integrity and operational safety (León-Henao et al., 2024). Understanding the causes, types, and prevention methods of weld cracking is therefore crucial to ensuring the long-term reliability of these industrial systems (Guo et al., 2024; Pengchao, 2025).

Welding is a critical process in pipeline fabrication, but it can introduce various defects that compromise system integrity (Chen et al., 2022). Weld cracks may result from excessive heat input, insufficient cooling, or residual stresses, potentially leading to failure under pressure (Guo et al., 2024). Porosity, caused by trapped gas, weakens the weld bead structure (Feng et al., 2016). Incomplete fusion and lack of penetration - typically due to insufficient heat or poor technique - lead to weak joints that are prone to failure (Lai et al., 2022). Slag inclusions and contamination from impurities also compromise weld strength. Additionally, distortion and warping from uneven heat distribution can disrupt pipeline alignment and structural integrity. Addressing these defects through stringent procedures, robust quality control, and advanced repair methods is essential to maintaining pipeline reliability (Mandal et al., 2024; Cui et al., 2024; Djendara et al., 2025; Al Shabibi, 2024).

Pipeline repair offers numerous advantages, ensuring longevity, efficiency, and safety while minimizing service interruptions (Mohammadi et al., 2021; Zhou et al., 2021) It is also cost-effective, as repairs are significantly less expensive than full pipeline replacements (Patrick, 2004; Chan et al., 2015). Modern repair technologies - such as composite wraps and mechanical clamps - enable operational continuity with minimal downtime (Feng et al., 2016; Ma et al., 2021). Repairs also help protect the environment by preventing leaks that could contaminate soil and water resources. These interventions enhance structural integrity and reduce the risk of catastrophic failures (Mandal et al., 2024; Cui et al., 2024). Recent technologies, including epoxy-based composite reinforcements, offer improved crack resistance and significantly extend pipeline service life (Mohammadi et al., 2021; Saeedi et al., 2024). Implementing effective repair strategies thus optimizes resource use, ensures regulatory compliance, and reinforces the sustainability of critical infrastructure (Patrick, 2004).

In real-world applications, pipeline repair performance may also be affected by environmental factors such as temperature fluctuations, moisture ingress, and chemical exposure, which can alter the mechanical

ONLINE FIRST

properties of composite materials and weaken adhesive bonding over time (Banea et al., 2009; Ngabonziza et al., 2010). Although not addressed in the present study, these effects are critical to consider when evaluating the long-term durability of repair systems.

Several experimental studies have explored the repair of cracked pipelines using composite materials, combining both experimental and numerical approaches. Zarrinzadeh et al. (2017) investigated fatigue crack growth in aluminum tubes repaired with glass/epoxy patches using both testing and XFEM modeling. Li et al. (2020) conducted tests on externally cracked API 5L X65 pipes reinforced with various composite systems, revealing that the number of layers had a greater impact on performance than bond length. Lim et al. (2019) performed full-scale burst tests on repaired pipelines, demonstrating a 23% increase in burst pressure. Abduljabbar et al. (2022) studied pipelines repaired with carbon-fiber-reinforced polymers under internal pressure, finding lower burst pressures than standard predictions. Shafaee et al. (2023) evaluated the strength of pipes repaired with glass-fiber patches under pressure, highlighting the influence of layer count and fiber orientation. These findings confirm the effectiveness of composite repair systems as modern and economical alternatives to conventional methods.

Numerical studies have also been conducted to evaluate the performance of composite repairs. Chen et al. (2022) used finite element modeling to study the mechanical behavior of pipelines repaired with CFRP, showing that thicker layers and higher-stiffness interface materials enhance performance. Dumetriscu et al. (2021) compared different composite patch design methods based on defect orientation and width. Cao et al. (2022) applied the GTN model to simulate fracture behavior in circumferential welded joints, identifying the heat-affected zone (HAZ) as a common crack initiation site. Lim et al. (2019) also demonstrated a 23% increase in burst pressure through simulations, emphasizing the importance of material properties. These studies underscore the critical role of numerical modeling in optimizing composite repair designs.

While many studies assume a perfect bond between the composite wrap and the pipeline surface, real-world repairs often suffer from adhesive imperfections due to improper surface preparation, aging, or operational fatigue. These imperfections, particularly debonding zones, can significantly degrade the effectiveness of the reinforcement by limiting stress transfer across the interface. The presence of even small debonded regions can lead to localized stress concentrations and reduce the energy absorption capability of the bonded joint, thus increasing the risk of crack propagation or premature failure. Therefore, the consideration of adhesive

ONLINE FIRST

debonding as a parametric factor in numerical models is crucial to more accurately reflect the actual performance and durability of composite repair systems under realistic service conditions (Benkheira et al., 2022; Banea et al., 2009).

Building upon the earlier work by Majdoub et al. (2018), which investigated the effectiveness of composite wrap repair for longitudinal surface cracks in pressurized pipelines using finite element analysis, the present study aims to extend this analysis to welded pipeline regions. Specifically, it addresses the additional complexities introduced by weld zones, such as heterogeneous mechanical properties and stress concentrations.

The objective of this work is to propose and evaluate a composite wrapping technique for reinforcing cracked pipeline welds. A finite element analysis was conducted to assess the behavior of cracks located in the weld metal (WM) after repair, focusing on calculating stress intensity factors under elastic conditions. The influence of the composite wrap's geometric properties on reducing crack tip stress intensity was also examined. This study specifically focuses on how varying the composite reinforcement geometry affects the mechanical response of cracks located in the weld zone, providing novel insights into the optimization of repair strategies for welded pipeline systems.

Model description and mechanical properties

A pipeline model featuring a circumferential welded joint was developed, with a diameter of D = 1016 mm, a wall thickness of t = 12.8 mm, and an overall length of L = 40 m. The weld geometry is illustrated in Figure 1. Although the presence of residual weld reinforcement typically increases the local wall thickness, thereby enhancing the load, bearing capacity of the weld region (Chen et al., 2016; Guo et al., 2019; Mohammed et al., 2025) this effect was neglected in the present study to maintain a conservative approach in the numerical analysis.

An external longitudinal semi-elliptical surface crack was introduced in the weld zone, with a total surface length of 2c = 10.24 mm and a crack depth of a = 2.56 mm. To repair the damaged area, a composite overwrap system consisting of unidirectional glass fibers embedded in an epoxy matrix was applied. The fibers were aligned in the axial direction (0° orientation) and wrapped circumferentially around the pipeline at the weld location.

ONLINE FIRST

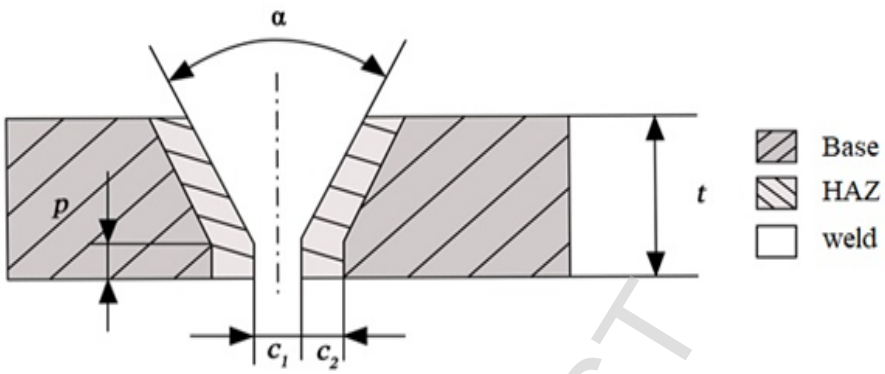

Figure 1 - Schematic representation of the circumferential welded joint geometry

Tables 1 and 2 provide a summary of the geometric dimensions and mechanical properties associated with the various regions of the model, including the base metal (BM), weld metal (WM), heat-affected zone (HAZ), composite overwrap, and adhesive interface.

Table 1 - Geometric properties of the pipeline and repair components

L (mm)	D (mm)	T (mm)	c_1 (mm)	c_2 (mm)	p (mm)	α°
4000	1016	12.8	2	2	2	55

To realistically simulate the repair system, a debonded region was introduced at the interface between the composite wrap and the adhesive layer. This debonded zone was modeled as an unbonded surface segment of 10 mm length, centered axially along the composite patch.

ONLINE FIRST

Table 2 - Material properties and mechanical characteristics of the base metal (BM), weld bead (WB), heat-affected zone (HAZ), composite wrap (Glass/Epoxy), and adhesive (Medjdoub et al., 2018; Chang et al., 2023; Fan et al., 2024)

Property	Materials					Description
	BM	WB	HAZ	Glass/Epoxy	Adhesive	
E_1	200000	200000	200000	160000	2400	Young's modulus in X direction (MPa)
E_2				25400		Young's modulus in Y direction (MPa)
E_3				25400		Young's modulus in Z direction (MPa)
ν_{12}	0.3	0.3	0.3	0.21	0.3	Poisson's Ratio in X-Y plan
ν_{13}				0.21		Poisson's Ratio in X-Z plan
ν_{23}				0.15		Poisson's Ratio in Y-Z plan
G_{12}				7200		Shear modulus in X-Y plan (MPa)
G_{13}				5500		Shear modulus in X-Z plan (MPa)
G_{23}				5500		Shear modulus in Y-Z plan (MPa)
G_a	1120	1900	2250	3500	[1200-1900-2250-3500-4200]	Shear modulus of adhesive (MPa)
σ_0	555.0	610.5	499.5			Yield stress (MPa)

ONLINE FIRST

Numerical modeling

The mechanical behavior of a pressurized pipeline featuring a surface-breaking crack and repaired with a composite overwrap was investigated through finite element analysis using Abaqus 2017. The model was discretized employing three-dimensional, 8-node linear brick elements with reduced integration (C3D8R), which offer an optimal compromise between computational accuracy and efficiency (Chen et al., 2021; Meniconi et al., 2002).

A structured global mesh was generated to accurately represent the geometry of the pipe and the repair system. Local mesh refinement was introduced in critical regions-most notably at the crack front and interfacial zones-where steep stress gradients are expected. The crack front was meshed with small, regular elements to resolve the stress singularity and allow accurate computation of fracture parameters, such as mode I stress intensity factors (Hirose et al., 2013). This resolution is essential for evaluating the crack-driving forces under loading conditions representative of service environments.

The composite wrap and adhesive layer, which are both relatively thin and mechanically dissimilar to the steel substrate, were modeled with finely layered elements to prevent artificial stiffness mismatches and ensure reliable simulation of stress transfer through the bonded interfaces. This is particularly important for capturing the interaction between the repair system and the host structure, as it governs the effectiveness of the load redistribution mechanism and the durability of the repair (Aabid et al., 2025; Thankur et al., 2024).

In order to assess the influence of interfacial imperfections on the repair efficiency, a debonded region was introduced at the interface between the composite wrap and the adhesive layer. This region was modeled as an unbonded surface of 10 mm in axial length, centered at the middle of the composite patch.

A frictionless contact interaction was defined in this zone to prevent artificial stress transfer, simulating a loss of adhesion due to manufacturing defects, surface contamination, or in-service degradation. The rest of the interface remained perfectly bonded using a tie constraint.

This approach enables a more realistic evaluation of the stress redistribution capacity of the repair system, particularly under thermal and mechanical loading. The introduction of such local debonding defects provides critical insight into the limits of adhesive performance and the need for strict quality control during repair application.

ONLINE FIRST

The final mesh consisted of 197,182 elements. Mesh quality, convergence behavior, and stability were rigorously assessed to validate the nonlinear solution, with special attention given to the crack tip and the material interfaces. All boundary conditions, material definitions, and contact interactions were thoroughly verified to preserve physical realism in the simulation (Madenci et al., 2020).

Figure 1 presents the overall finite element mesh, highlighting the region around the surface crack where mesh refinement was applied. Figure 2 focuses on the composite repair zone, showing detailed meshing of the overwrap and adhesive interface, which are critical to the accurate representation of interfacial stress transmission.

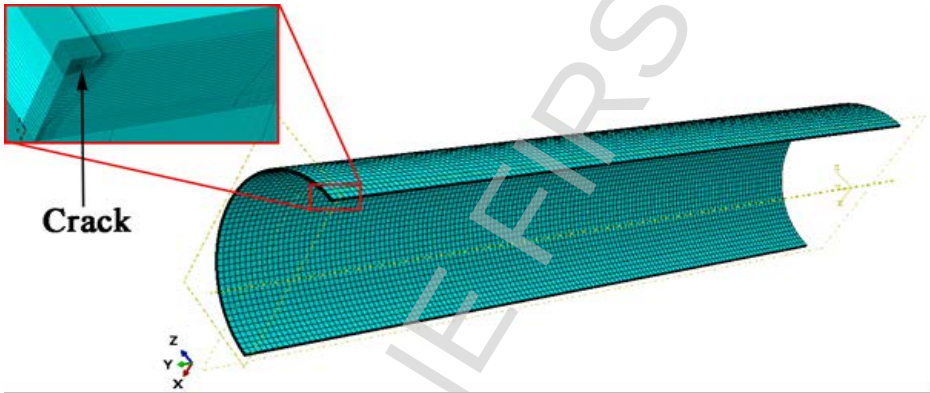

Figure 2 - Global view of the finite element mesh of the cracked pipeline, with a zoom on the surface crack region. Local mesh refinement enables accurate capture of stress singularities at the crack front

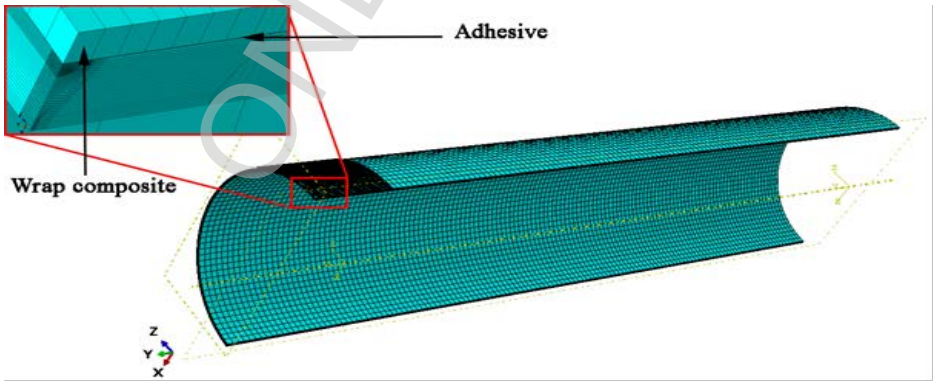

Figure 3 - Mesh representation of the repair zone, including the composite overwrap and adhesive layer. Refined meshing in these areas ensures accurate stress transfer between materials with differing stiffnesses

ONLINE FIRST

Boundary conditions

Leveraging the geometric and loading symmetries inherent to the repaired pipeline, the computational model was simplified to a quarter-cylinder segment (representing half the length and half the circumference), thereby significantly reducing computational demands while preserving the accuracy of stress predictions. The internal surface of the pipe was subjected to pressures ranging from 2 to 12 MPa, applied in 2 MPa increments, as depicted in Figure 4. These pressure levels correspond to standard operational and overpressure scenarios typical of oil and gas transmission pipelines (Chen et al., 2021). The internal pressure generates hoop and axial stresses within the pipe wall, which interact with both the crack and the bonded composite repair, thereby affecting local stress concentrations and the potential for damage progression.

Symmetry boundary conditions were imposed to replicate the full geometry: along the longitudinal symmetry plane, displacements and rotations were restricted $U_Y = \theta_X = \theta_Z = 0$; on the circumferential symmetry plane, the constraints $UZ = \theta_X = \theta_Y = 0$ were applied, as shown in Figure 5. These conditions effectively eliminate rigid body motion while maintaining mechanical equilibrium.

The contact interactions between the steel pipe, adhesive layer, and composite wrap were defined using surface-to-surface contact pairs in Abaqus/Standard. A hard contact formulation was applied in the normal direction to prevent penetration, while a frictionless model was assumed in the tangential direction to simulate ideal bonding. This approach captures the stress transfer mechanism between the host pipe and the repair system under internal pressure, which is essential for accurate damage assessment (Lim et al., 2019; Medjdoub et al., 2018).

In the finite element model, boundary conditions were applied to replicate the operational environment of the pipeline under internal pressure and symmetry constraints.

To accurately capture the effect of adhesive debonding, a localized debonded zone at the composite-adhesive interface was modeled using surface-to-surface contact interactions with frictionless behavior. This contact allowed separation without shear transfer, representing the loss of adhesion in that region.

The rest of the composite wrap interface was constrained with tie conditions to simulate perfect bonding. These boundary and contact conditions ensured realistic simulation of load transfer and stress redistribution in the presence of bonding imperfections (Zarrinzadeh et al., 2017).

ONLINE FIRST

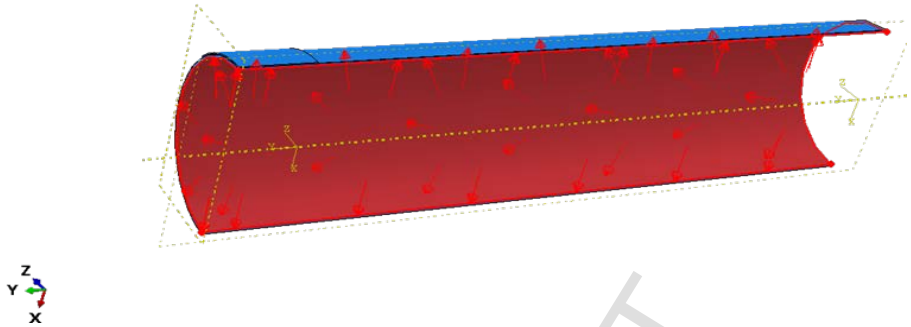

Figure 4 - Application of internal pressure on the internal surface of the quarter-cylinder pipe model

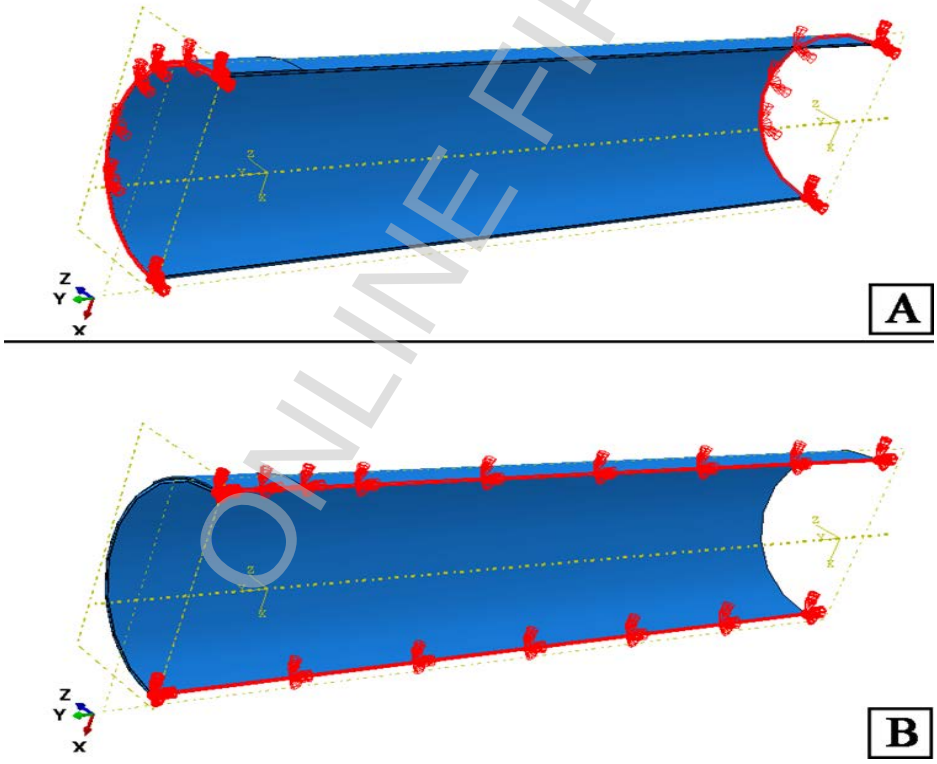

Figure 5 - Boundary conditions applied to the repaired pipeline model – (A) Longitudinal symmetry plane (UY = θX = θZ = 0); (B) Circumferential symmetry plane (UZ = θX = θY = 0)

ONLINE FIRST

Results and discussion

The stress intensity factors (SIFs) at the crack front were determined using the Virtual Crack Closure Technique (VCCT). This approach, based on the energy balance principle originally proposed by Irwin (Irwin, 2007), facilitates the calculation of energy release rates corresponding to various fracture modes. Specifically, for Mode I loading, the energy release rate G_i is related to the stress intensity factor K_i and the elastic modulus E through the following relationship (Leski, 2007):

$$G_i = \frac{k_i^2}{E} \tag{1}$$

VCCT is particularly effective for linear elastic materials and supports various material behaviors, including isotropic, orthotropic, and anisotropic elasticity (Kruger, 2004; Hartquist, 2025). Physically, this technique assumes that the energy required to close a crack is equivalent to the energy released during its propagation, making it well-suited for evaluating fracture toughness in composite materials.

The precision of the VCCT is highly contingent upon the quality of the finite element mesh. To reduce numerical errors and enhance solution reliability, it is advisable to employ elements of uniform size both ahead of and behind the crack tip (Leski, 2007; Durmus et al., 2025). Mesh refinement near the crack front is crucial, as stress gradients are highest in this region. Therefore, a mesh convergence study was conducted to balance accuracy with computational efficiency. As demonstrated in recent studies (Guessab et al., 2025; Stapley, 2025; Karmakov et al., 2020), convergence testing is essential to ensure that the computed SIFs are not sensitive to further refinement.

This study examined two configurations. The first focused on assessing the effects of geometric parameters - namely, the length, thickness, and wrap coverage angle of a composite patch- applied to a longitudinal semi-elliptical surface crack. These variables play a crucial role in the load transfer process and stress distribution around the crack tip, thereby impacting the effectiveness of the patch in impeding crack propagation.

In the second configuration, we examined the influence of the adhesive layer's shear modulus and thickness on the variation of the SIF. Adhesive properties directly affect the stress transfer between the composite patch and the substrate, and hence the effectiveness of the repair. A stiffer adhesive can improve load transfer but may induce higher

ONLINE FIRST

peel stresses, whereas a more compliant adhesive distributes stresses more evenly (Goland et al., 1944; Aderdiran et al., 2025; Kumar et al., 2025).

For comparison purposes, an unrepaired pipe configuration was also analyzed and presented as a baseline reference. This approach enables quantification of the repair's effectiveness in reducing the SIF and improving the structural integrity of the damaged component.

Effect of composite patch length on mode i stress intensity factor in repaired cracked pipes under internal pressure

Figure 6 depicts the relationship between the Mode I Stress Intensity Factor (KI) and internal pressure for various composite patch lengths Lp ranging from 100 mm to 400 mm. The purpose of this analysis is to assess how patch length influences the mechanical behavior of a cracked pipeline reinforced with a composite overwrap. To isolate this variable, other geometric parameters were kept constant, including a patch thickness of tp = 6 mm, an adhesive layer thickness of ta = 0.1 mm, and a full circumferential wrap angle of θ = 360°, representing complete encirclement of the pipe circumference.

The selection of these values is based on both mechanical and practical considerations. The patch thickness was chosen to ensure adequate stiffness without introducing excessive structural weight, while the thin adhesive layer configuration promotes efficient shear transfer and minimizes stress concentrations. A 360° wrap provides uniform load distribution and reinforcement symmetry around the pipe's circumference, which reduces local imbalances induced by internal pressure. These simulation conditions are representative of real-world repair scenarios used in industry.

Numerical analysis reveals that increasing the patch length leads to a progressive reduction in the KI values. This trend is attributed to the enlarged bonded area between the composite patch and the metallic substrate, which enhances load transfer through the adhesive layer. A longer patch enables more effective redistribution of stress around the crack, thereby lowering the stress concentration at its tip. This behavior aligns with recent findings demonstrating that increasing patch length improves the system's capacity to divert mechanical loads away from the damaged zone (Abdulla et al., 2024; Ali et al., 2013).

As expected, increasing the internal pressure results in higher KI values due to the intensification of hoop stresses induced by service

ONLINE FIRST

loading. However, this rise is mitigated by the presence of the composite patch, especially when longer patches are employed. The composite reinforcement functions as a mechanical shield that limits the amplification of local stresses at the crack front. This stress-mitigating effect becomes more pronounced as the reinforced area is extended. Previous studies have shown that this load-sharing mechanism is more effective when the bonded surface is optimized (Karmakov et al., 2020; Tian et al., 2025; Yu et al., 2021).

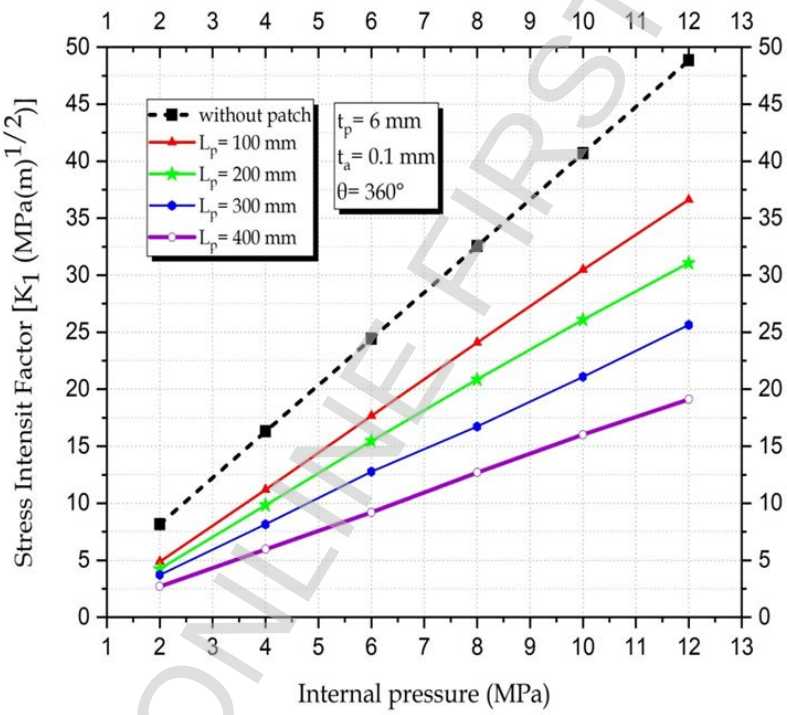

ONLINE FIRST

Figure 6 - Variation of SIF with Internal Pressure for Various Wrap Lengths

The observed decrease in SIF with increasing patch length aligns with experimental findings by (Lim et al., 2019), who conducted full-scale burst pressure tests on repaired steel pipelines. Their results showed a 23% improvement in burst pressure when using longer composite wraps, confirming that an increased bonded surface enhances stress redistribution around the crack. These outcomes corroborate our

simulation, where longer patches resulted in lower KI values under internal pressure.

Effect of composite wrap recovery angle on stress intensity factor

Figure 7 illustrates the changes in the stress intensity factor (SIF) at the crack front as a function of internal pressure for composite wrap thicknesses varying between 6 mm and 12 mm. All simulations were performed with a fixed wrap length of Lp = 400 mm, adhesive thickness of ta = 0.1 mm, and full circumferential coverage (θ = 360°).

The results reveal a strong inverse correlation between wrap thickness and SIF values. In the unpatched configuration, the SIF increases nearly linearly with internal pressure, reaching up to 48 MPa.m1/2 at 12 MPa. In contrast, specimens reinforced with composite wraps exhibit significantly lower SIFs. Notably, a 12 mm wrap results in a reduction exceeding 60% compared to the unreinforced case under identical pressure conditions.

This behavior can be explained by the enhanced stiffness and stress redistribution provided by thicker composite layers. The bonded wrap mitigates the concentration of mechanical energy at the crack tip, thereby reducing the local driving force for crack propagation. These findings are consistent with the literature, where increased wrap thickness has been shown to lower fracture parameters in repaired pressure pipelines (Savani, 2022; Liu et al., 2017; Said et al., 2025).

Moreover, even though the adhesive layer is thin, it plays a key role in transferring loads between the steel substrate and the composite material. A well-bonded interface ensures effective mechanical synergy, which becomes more pronounced as the wrap thickness increases (Zhou et al., 2021; Aabid et al., 2025).

Although few studies have isolated the wrap recovery angle, the trends observed here are in line with the work of (Zarrinzadeh et al., 2017), who noted improved fatigue performance when using optimized patch dimensions and orientation. Their results suggest that increasing the effective engagement angle improves crack containment, supporting our findings that wider wrap angles reduce SIF values more effectively under pressure.

ONLINE FIRST

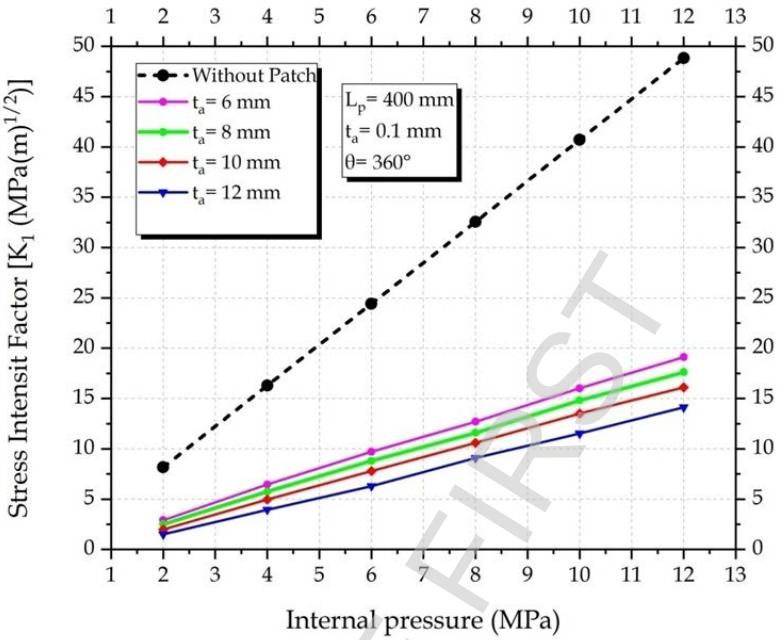

Figure 7 - Variation of SIF with Internal Pressure for Different Wrap Thicknesses

Influence of the composite wrap coverage angle on the stress intensity factor

Figure 8 illustrates the effect of the composite wrap coverage angle on the variation of the stress intensity factor (SIF) at the crack front, under different levels of internal pressure. The simulations were performed using a wrap length of Lp = 400 mm, a composite thickness of tp = 12 mm, and an adhesive thickness of ta = 0.1 mm. The wrap coverage angle θ\theta was varied from 30° to 360°.

The results clearly show that increasing the wrap angle leads to a reduction in the SIF for a given internal pressure. This reduction becomes especially significant beyond 180°, reaching its lowest value at full 360° coverage, where the crack is entirely encased by the composite material. This behavior can be attributed to the enhanced redistribution of mechanical stresses around the crack zone offered by a more extensive coverage.

The composite wrap acts as a mechanical barrier, absorbing a portion of the internal loads and limiting localized deformation near the defect. The broader the wrap coverage, the more effectively it redistributes these

ONLINE FIRST

stresses, reducing the concentration at the crack tip. Recent studies have confirmed this trend, highlighting that full wrap coverage (θ = 360°) significantly improves the durability and safety of pressure pipelines (Srilakshmi, 2014; Davaripour et al., 2022; Mousa et al., 2023).

Therefore, the selection of the wrap angle plays a critical role in the design of an effective repair. While partial coverage can enhance performance, full circumferential wrapping ensures optimal stress mitigation and crack containment.

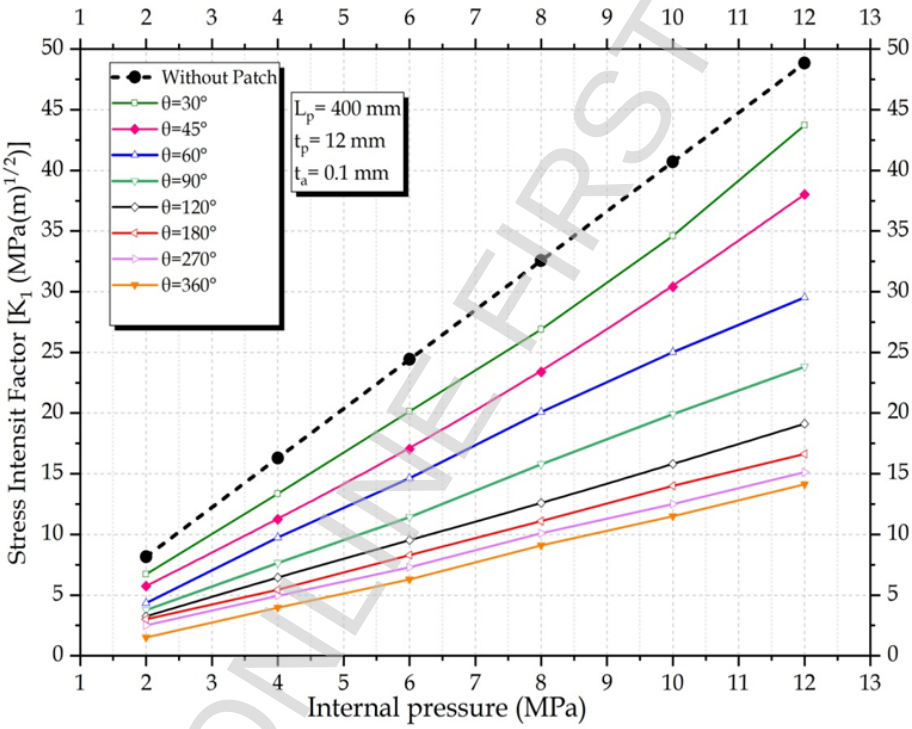

Figure 8 - Variation of SIF with Internal Pressure for Different Wrap Coverage Angles

Effect of adhesive shear modulus on repair performance

We analyzed how adhesive shear modulus and thickness affect the efficiency of composite repairs. Figure 9 displays changes in the Mode I stress intensity factor (SIF, KI) under varying internal pressures. Simulations were performed for adhesive shear moduli ranging from 1120 MPa to 4200 MPa. The adhesive layer thickness remained constant at 0.1 mm. The overwrap was 400 mm long and 12 mm thick. A full 360° wrap was applied to provide complete circumferential reinforcement.

ONLINE FIRST

It is observed that an increase in the adhesive shear modulus leads to a progressive reduction in the KI value at the crack front. This behavior can be explained by the fact that a stiffer adhesive (with higher shear modulus) facilitates a more efficient load transfer and promotes a more uniform stress distribution across the bonded joint. This redistribution decreases the stress concentration at the crack tip, thereby reducing the likelihood of crack propagation (Abdull et al., 2024; Alexander, 2007) .

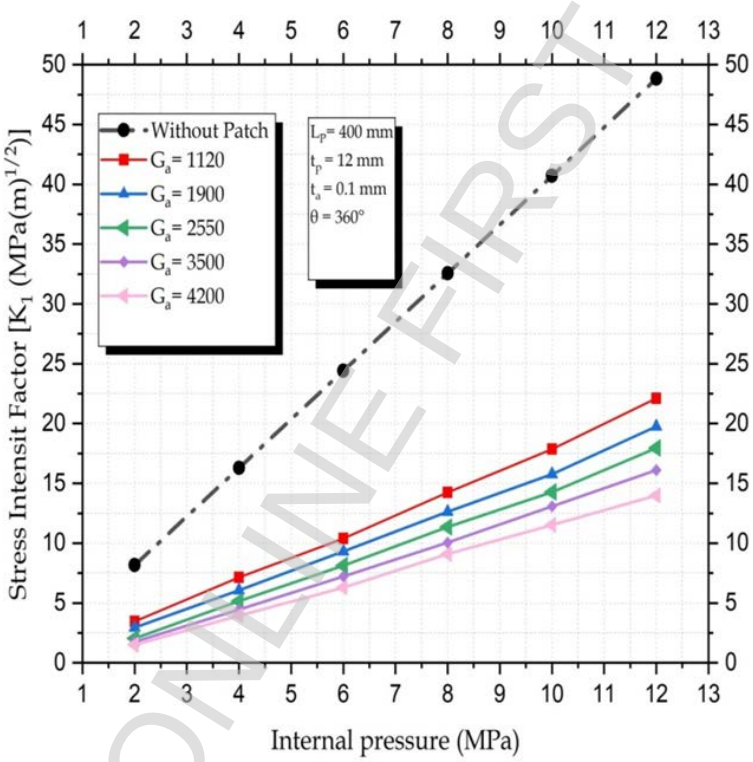

ONLINE FIRST

Figure 9 - Variation of Stress Intensity Factor (SIF) with Internal Pressure for Various Adhesive Shear Moduli

This mechanism is consistent with established findings in the mechanics of bonded materials, where increased joint stiffness minimizes local deformation and improves the load-sharing capability between the composite patch and the metallic substrate (Banea et al., 2009; Wei et al., 2024). At elevated internal pressures, this effect becomes more pronounced due to the amplification of circumferential (hoop) stresses,

making the adhesive interface stiffness even more critical to repair durability (Deng et al., 2017).

In summary, this analysis demonstrates that optimizing the adhesive shear modulus is a key factor in enhancing the performance of composite repairs, especially in environments subjected to high internal pressures. Recent studies emphasize that for a repair to be both durable and reliable, the selection of the adhesive should not be based solely on strength, but must also consider stiffness, toughness, and substrate compatibility (Mohammadi et al., 2021).

Experimental results from (Shafaee et al., 2023) showed that increasing fiber coverage (layer count and orientation) in glass/epoxy patches significantly improved the load-bearing capacity of repaired pipelines. Their findings validate our numerical conclusion that full circumferential coverage (360°) yields the lowest SIF values by fully encasing the defect zone and promoting uniform stress redistribution.

Influence of adhesive thickness on the stress intensity factor

Figure 10 presents the influence of the adhesive thickness ta on the Mode I Stress Intensity Factor (KI), under a configuration where the adhesive shear modulus is fixed at Ga = 4200 MPa, with a composite wrap length of Lp = 400 mm, wrap thickness tp = 12 mm, and a full wrap angle of θ = 360° ensuring complete confinement of the pipe.

The numerical results clearly demonstrate that increasing the adhesive thickness leads to a significant rise in KI at the crack front. In other words, the thicker the adhesive layer, the less effective the repair becomes in reducing the stress concentration. This behavior is directly related to the overall stiffness of the bonded joint: a thinner adhesive layer allows for more efficient load transfer to the composite wrap, enhancing stress confinement around the crack (Shafaee et al., 2023).

In contrast, a thicker adhesive layer becomes more deformable, which introduces a local damping effect that reduces load transfer. This excessive deformation may result in internal stress accumulation within the adhesive, increasing the risk of debonding or adhesive failure (Benkheira et al., 2022; Banea et al., 2022). Consequently, a thicker layer diminishes the patch's ability to contain the stresses effectively, leading to an increased KI with higher internal pressures.

These results highlight the need for an optimal balance: while a minimum adhesive thickness is required to ensure proper wetting and surface adhesion, excessive thickness can be detrimental to the mechanical performance of the repair. Recent studies generally

ONLINE FIRST

recommend keeping the adhesive thickness below 0.2 - 0.3 mm for repairs subjected to high internal pressures (Soutis et al., 1997).

The negative impact of increased adhesive thickness on repair efficiency matches the observations by Benkheira et al. (2022) and Jawwad et al. (2024), who experimentally showed that thicker adhesive layers increase local compliance and reduce stress transfer efficiency. They also reported a higher risk of debonding and crack growth in specimens with excessive adhesive thickness, which is in line with our numerical results showing elevated SIF values for thicker adhesive interfaces.

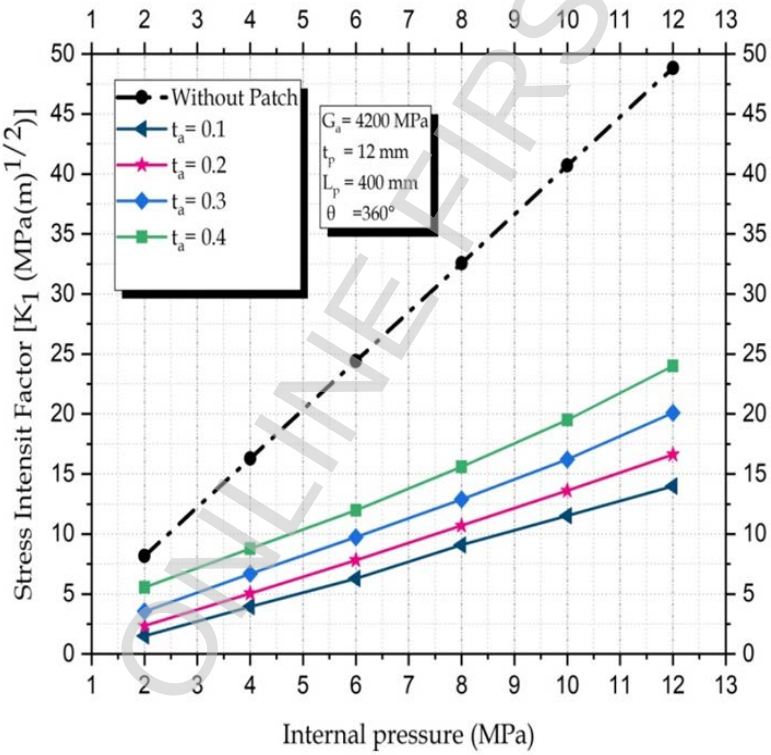

Figure 10 - SIF vs. internal pressure for different thickness of adhesive

ONLINE FIRST

Impact of adhesive debonding on stress intensity factor in composite-patched pipelines

The graph in Figure 11 illustrates the variation of the Mode I Stress Intensity Factor (SIF) as a function of internal pressure for three different conditions: an unrepaired cracked pipeline, a pipeline repaired with a perfectly bonded composite wrap, and a pipeline repaired with a composite wrap exhibiting a localized adhesive debonding defect. The SIF quantifies the intensity of the stress field near the crack tip and is directly related to the likelihood of crack propagation and eventual failure. The unrepaired pipeline exhibits the highest SIF values, increasing linearly with internal pressure, indicating a high risk of crack growth under operational loading. The application of a composite wrap significantly reduces the SIF by providing a mechanical reinforcement that redistributes and lowers the stress concentration at the crack tip. However, the presence of adhesive debonding compromises this load transfer mechanism. The debonded interface acts as a localized stress concentrator, disrupting the shear load path between the composite and the pipe substrate, thereby increasing the SIF compared to the ideal bonded case. This effect intensifies with increasing pressure, highlighting the susceptibility of the repair to failure when adhesive integrity is lost.

These findings underscore the critical importance of ensuring strong adhesive bonds during repair application and monitoring their condition during service to prevent premature failure. Similar conclusions have been reached in recent experimental and numerical studies demonstrating that even small debonding defects can significantly degrade repair performance (Lai et al., 2022; Benkheira et al., 2022).

Our simulation results indicating increased SIF due to adhesive debonding are strongly supported by the work of Zarrinzadeh et al. (2023), who experimentally studied composite-patched aluminum pipes and found that even small debonding zones significantly compromised fatigue performance. Benkheira et al. (2022) and Deng et al. (2025) also confirmed through tests that interfacial defects cause stress concentration and reduced load transfer, validating the critical role of bond integrity in ensuring repair efficiency.

ONLINE FIRST

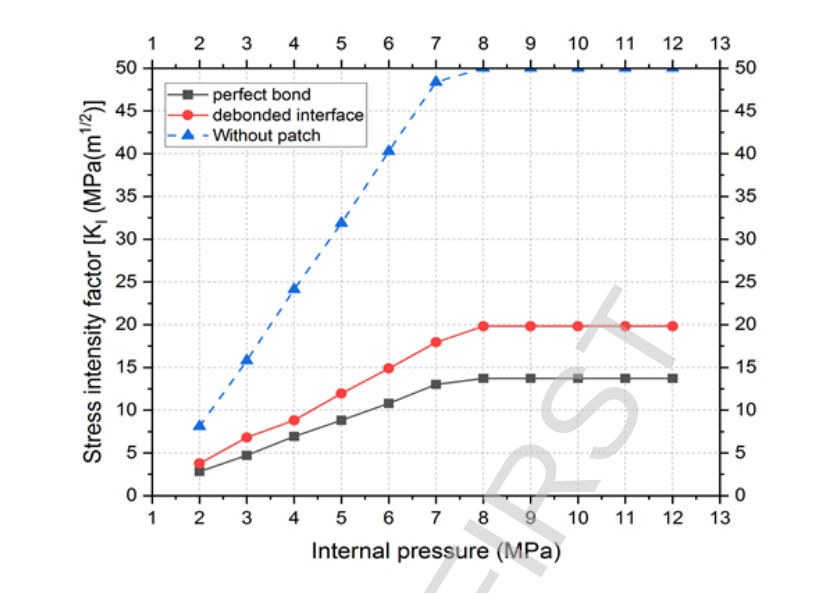

Figure 11 - Impact of Adhesive Debonding on Stress Intensity Factor

Conclusion

This study has provided a comprehensive numerical evaluation of composite wrap reinforcements applied to pipelines containing longitudinal semi-elliptical surface cracks in welded regions. Using advanced finite element modeling and the Virtual Crack Closure Technique (VCCT), the influence of key geometric and interfacial parameters on the Mode I Stress Intensity Factor (SIF) was systematically investigated.

The results confirm that increasing the composite wrap length and thickness significantly enhances the repair's ability to redistribute stresses and attenuate crack tip driving forces. A full wrap angle of 360° was found to be particularly effective, as it ensures complete circumferential confinement, resulting in the greatest reduction of the SIF under internal pressure. In addition to geometric parameters, the adhesive layer's mechanical properties were shown to play a pivotal role in repair performance. A higher adhesive shear modulus facilitates improved load transfer across the interface, while excessive adhesive thickness reduces structural stiffness, leading to elevated SIF values. These findings underscore the importance of simultaneously optimizing both the stiffness and thickness of the adhesive layer to ensure effective stress transfer and prevent failure modes such as debonding.

ONLINE FIRST

The simulation results further demonstrate that localized adhesive debonding significantly compromises the stress redistribution capability of the composite repair system. The loss of bonding integrity increases the SIF and raises the risk of premature crack propagation. These findings highlight the critical need for strict quality control during repair application and suggest that in-service inspections should prioritize early detection of bonding defects. Future studies should incorporate detailed Finite Element Analyses of interfacial stress and traction distributions to provide deeper insights into local load transfer mechanisms and better characterize failure initiation zones.

Moreover, although this study employed a rectangular patch geometry consistent with industrial practice, it is recognized that alternative patch profiles-such as tapered or elliptical shapes-may offer improved stress distribution by mitigating edge stress concentrations. Investigating these geometries could enhance repair robustness and reduce failure risk, particularly at patch boundaries where high local stresses typically arise.

In real-world operating conditions, the long-term behavior of composite repairs may also be influenced by environmental factors, including thermal cycling, moisture ingress, and chemical exposure. These effects can degrade adhesive and composite material properties over time, thereby reducing repair effectiveness. Future research should therefore address environmental degradation within the modeling framework to improve durability predictions and expand applicability.

Finally, while this investigation focuses on static loading conditions, fatigue crack growth remains a primary concern in pressurized pipelines. Incorporating fatigue analysis into future simulations would enable evaluation of the long-term performance of composite-reinforced weld zones under cyclic pressure variations. This extension would provide essential insights into the service life of repaired structures and strengthen the practical relevance of the proposed repair approach.

References

Aabid, A., Bin Rosli, M. and Hrairi, M . 2025 . Enhancing repair of cracked plate using fiber-reinforced composite patch: Experimental and simulation analysis, *Forces in Mechanics*, 18, p. 100302. Available at: https://doi.org/10.1016/j.finmec.2024.100302

Abduljabbar, A., Khazal, H. and Hassan, A.K.F. 2022 .Experimental study on repair of cracked pipe under internal pressure , *Periodicals of Engineering and*

ONLINE FIRST

Natural Sciences (PEN), 10(6), pp. 67–76. Available at: http://dx.doi.org/10.21533/pen.v10i6.3369

Abdulla, M., Hrairi M., Aabid, A. and Abdullah, N. 2024 .Influence of adhesive curing temperature and geometrical parameters on composite patch repair of cracked structures , *Journal of Advanced Research in Fluid Mechanics and Thermal Sciences,* 119(1), pp. 1–12. Available at: https://doi.org/10.37934/arfmts.119.1.112

Adediran, I., Fritz, J. and Truster, T. 2025. Comparative analysis of different adhesive model representations in single lap joints using finite element analysis, *Applied Sciences*, 15(5). Available at: https://doi.org/10.3390/app15052661

Al Shabibi, A., Aal Thani, I., Al Jahwari, F. and Goher, K. 2024. Failure analysis using finite element method of defective pipelines reinforced with composite repair system, *Petroleum Science and Technology*, pp. 1–19. Available at: https://doi.org/10.1080/10916466.2024.2384524

Alexander, C. 2007. Guidelines for repairing damaged pipelines using composite materials in *Nnational Aassociation of Ccorrosion Eengineering. NACE.* Availabel at: https://www.chrisalexander.com/wp-content/uploads/2020/05/8-5.pdf

Ali Ghaffari, M. and Hosseini-Toudeshky, H. 2013. Fatigue crack propagation analysis of repaired pipes with composite patch under cyclic pressure , *Journal of Pressure Vessel Technology*, 135(3), p. 031402. Available at: https://doi.org/10.1115/1.4023568

Ali, A.J., Toor, Z.S,. Shifa, M. and Manzoor, O. 2024. Root cause analysis of glass fiber-reinforced polymer composite pipe failed in marine environment, *Journal of Failure Analysis and Prevention*, 24(3), pp. 1351–1364. Available at: https://doi.org/10.1007/s11668-024-01926-6

Baghban, A. and Yousefikhoshbakht, M. 2022. A mathematical model for planning oil products distribution via pipeline, arXiv preprint arXiv:2203.15295. Available at: https://doi.org/10.48550/arXiv.2203.15295

Banea, M.D. and da Silva, L.F. 2009. Adhesively bonded joints in composite materials: an overview , Proceedings of the Institution of Mechanical Engineers, Part L*: Journal of Materials: Design and Applications*, 223(1), pp. 1–18. Available at: https://doi.org/10.1243/14644207JMDA219

Benkheira, A., Belhouari, M. and Gong, X.L. 2022 . Experimental and numerical study of the effect of debonding defect in composite patch repairs on composite plate , *Journal of Failure Analysis and Prevention*, 22(4), pp. 1669–1692. Available at: https://doi.org/10.1007/s11668-022-01455-0

Berkache, A., Lee, J. and Choe, E. 2021 . Evaluation of cracks on the welding of austenitic stainless steel using experimental and numerical techniques , *Applied Sciences*, 11(5), p. 2182. Available at: https://doi.org/10.3390/app11052182

Cao, Y., Chang, Q. and Zhen, Y. 2022. Numerical simulation of fracture behavior for the pipeline with girth weld under axial load, *Engineering Failure Analysis,* 136, p. 106221. Available at: https://doi.org/10.1016/j.engfailanal.2022.106221

ONLINE FIRST

Chan, P.H., Tshai, K,Y., Johnson, M. and Li, S.2015. Finite element analysis (FEA) modelling of fiber-reinforced polymer (FRP) repair in offshore risers , in Rehabilitation of Pipelines Using Fiber-reinforced Polymer (FRP) *Composites. Elsevier*, pp. 177–210. Available at: https://doi.org/10.1016/B978-0-85709-684-5.00009-6

Chang, Q., Cao, Y., Zhen, Y. and Fagen, L. 2023. Study on the effect of loading conditions on the fracture behavior of pipeline with girth weld , *International Journal of Pressure Vessels and Piping*, 203, p. 104940. Available at: https://doi.org/10.1016/j.ijpvp.2023.104940

Chen, J., Wang, H., Salemi, M. and Balagruru, P.N . 2021. Finite element analysis of composite repair for damaged steel pipeline , *Coatings,* 11(3), p. 301. Available at: https://doi.org/10.3390/coatings11030301

Chen, Y., Xie, Y., Wang, W. and Li, J. 2022. Failure analysis of weld cracking of gas gathering pipeline in dewatering station , *Journal of Engineering and Applied Science,* 69(1), p. 94. Available at: https://doi.org/10.1186/s44147-022-00131-2

Chen, Y., Feng, R. and Ruan, X. 2016 . Behaviour of steel-concrete-steel SHS X-joints under axial compression*, Journal of Constructional Steel Research*, 122, pp. 469–487. Available at: https://doi.org/10.1016/j.jcsr.2016.04.006

Cui, C., Bortot, P., Ortolani, M. and Martinez-Paneda, E. 2024. Computational predictions of hydrogen-assisted fatigue crack growth , *International Journal of Hydrogen Energy*, 72, pp. 315–325. Available at: https://doi.org/10.1016/j.ijhydene.2024.05.264

Davaripour, F., Roy, K. and Maghoul, P. 2022 .Application of CFRP wrap for reinforcing undamaged thin-walled pipe bends under thermal expansion loads*, Journal of Pipeline Systems Engineering and Practice*, 13(4), p. 04022040. Available at: https://doi.org/10.1061/(ASCE)PS.1949-1204.0000677

Deng, J., Zhou, G., Bordas, S., Xiang, C. and Cai, D. 2017. Numerical evaluation of buckling behaviour induced by compression on patch-repaired composites, *Composite Structures*, 168, pp. 582–596. Available at: https://doi.org/10.1016/j.compstruct.2016.12.071

Deng, J., Huang, W. and Cheng, X. 2025. Tensile properties of scarf-repaired composite laminates with bonding defects, *Applied Composite Materials,* 32(2), pp. 575–597. Available at: https://doi.org/10.1007/s10443-024-10286-1

Djendara, A.A., Khiari, M.A., Benzaama, A., and Bencherif, M. 2025. Study of heat-induced and residual stress patterns in stainless steel pipe welds, *Studies in Science of Science*, 43(2), pp. 219–234. Available at: https://doi.org/10.5281/zenodo.14967753

Dumitrescu, A., Minescu, M. Dinita, A, and Lambrescu, I.2021. Corrosion repair of pipelines using modern composite materials systems: A numerical performance evaluation*, Energies,* 14(3), p. 615. Available at: https://doi.org/10.3390/en14030615

Durmus, H., Kaman, M.O., Yanen, C. and Mustafa, A. 2025. Fracture behavior of cracked composite plates repaired with a patch under various loading

ONLINE FIRST

conditions , *Sādhanā,* 50(1), p. 15. Available at: https://doi.org/10.1007/s12046-025-02678-1

Fan, Y., Shuai, Y., Shuai, J., Zhang, T., Zhang, Y., Shi, L. and Shan, K. 2024. The effect of pipeline root weld microstructure on crack growth behaviour , *Engineering Failure Analysis*, 161, p. 108265. Available at: https://doi.org/10.1016/j.engfailanal.2024.108265

Feng, Q., Li, R., Nie, B., Liu, S., Zhao, L. and Zhang, H. 2016 . Literature review: Theory and application of in-line inspection technologies for oil and gas pipeline girth weld defection, *Sensors,* 17(1), p. 50. Available at: https://doi.org/10.3390/s17010050

Goland, M. and Reissner, E. 1944. The stresses in cemented joints . *Journal of Applied Mechanics*, 11(1), pp.A17–A27. Available at: https://doi.org/10.1115/1.4009336

Guessab, A., Slamene, A., Hamza, B. and Mokhtari, M. 2025. Localized heat treatment and XFEM-based investigation of damage mechanisms in reinforced notched plates under uniaxial tensile stress, *Mechanics of Advanced Materials and Structures,* 32(5), pp. 826–840. Available at: https://doi.org/10.1080/15376494.2024.2356073

Guo, L., Wang, J., Wu, S. and Zhong, L. 2019. Experimental investigation and analytical modelling of blind bolted flush or extended end plate connections to circular CFDST columns, *Engineering Structures*, 192, pp. 233–253. Available at: https://doi.org/10.1016/j.engstruct.2019.04.053

Guo, L., Wang, L., Wang, L., Wu, M., Pan, T., Xiao, H., Qiao, N. and Li, X. 2024. Failure analysis of fillet weld crack in linepipe , *Materials Technology*, 39(1), p. 2366745. Available at: https://doi.org/10.1080/10667857.2024.2366745

Hartquist, C., Wang, S., Cui, Q., Matsuki, W., Deng, B. and Zhao, X. 2025. Scaling law for intrinsic fracture energy of diverse stretchable networks', *Physical Review X,* 15(1), p. 011002. Available at: https://doi.org/10.1103/PhysRevX.15.011002

Hirose, Y., Matsuda, H., Matsubara, G., Masaki, H., Yoshida, K. and Inamura, F. 2013. Numerical analysis of splice-type crack arrester with a filler under mode-I type loading , *Composite Structures*, 100, pp. 127–134. Available at: https://doi.org/10.1016/j.compstruct.2012.12.045

Irwin, G.R. 1957. Analysis of stresses and strains near the end of a crack traversing a plate. *Journal of Applied Mechanics*, 24(3), pp.361–364.Available at: https://doi.org/10.1115/1.4011547

Karmakov, S., Cepero-Mejías, F. and Curiel-Sosa, J. 2020. Numerical analysis of the delamination in CFRP laminates: VCCT and XFEM assessment, *Composites Part C: Open Access*, 2, p. 100014. Available at: https://doi.org/10.1016/j.jcomc.2020.100014

Klass, A.B. and Meinhardt, D. 2014. Transporting oil and gas: US infrastructure challenges, *Iowa Law Review*, 100, p. 947. Available at: https://ssrn.com/abstract=2410977

ONLINE FIRST

Krueger, R. 2004. Virtual crack closure technique: History, approach, and applications', *Applied Mechanics Reviews*, 57(2), pp. 109–143. Available at: https://doi.org/10.1115/1.1595677

Kumar, V. and Singh, A. 2025. Investigation of mode I fatigue crack growth in CFRP-aluminium adhesive joints: Effects of loading protocols, fiber bridging, and similitude parameters, *Engineering Fracture Mechanics*, 319, p. 111010. Available at: https://doi.org/10.1016/j.engfracmech.2025.111010

Lai, H., Fan, D. and Liu, K. 2022. The effect of welding defects on the long-term performance of HDPE pipes, *Polymers,* 14(19), p. 3936. Available at: https://doi.org/10.3390/polym14193936

León-Henao, H., et al. 2024. Failure analysis of a welded 316L stainless-steel stack with premature damage due to stress-corrosion cracking , *Journal of Failure Analysis and Prevention,* 24(6), pp. 2683–2699. Available at: https://doi.org/10.1007/s11668-024-01990-y

Leski, A. 2007. Implementation of the virtual crack closure technique in engineering FE calculations , *Finite Elements in Analysis and Design*, 43(3), pp. 261–268. Available at: https://doi.org/10.1016/j.finel.2006.10.004

Li, Z., Jiang, X., Hopman, H., Zhu, L. and Liu, Z. 2020. External surface cracked offshore steel pipes reinforced with composite repair system subjected to cyclic bending: An experimental investigation, *Theoretical and Applied Fracture Mechanics,* 109, p. 102703. Available at: https://doi.org/10.1016/j.tafmec.2020.102703

Lim, K.S., Azraai, S., Yahaya, N., Noor, N.M., Zardasti, L. and Kim, J.H. 2019. Behaviour of steel pipelines with composite repairs analysed using experimental and numerical approaches, *Thin-Walled Structures*, 139, pp. 321–333. Available at: https://doi.org/10.1016/j.tws.2019.03.023

Liu, J., Qin, M., Zhao, Q., Chen, L., Liu, P. and Gao, J. 2017. Fatigue performances of the cracked aluminum-alloy pipe repaired with a shaped CFRP patch, *Thin-Walled Structures*, 111, pp. 155–164. Available at: https://doi.org/10.1016/j.tws.2016.11.008

Ma, Q., Tian, G., Zeng, Y., Li, R., Song, H., Wang, Z., Gao, B. and Zeng, K. 2021. Pipeline in-line inspection method, instrumentation and data management, *Sensors,* 21(11), p. 3862. Available at: https://doi.org/10.3390/s21113862

Madenci, E., Özkılıç, Y.O. and Gemi, L. 2020. Experimental and theoretical investigation on flexure performance of pultruded GFRP composite beams with damage analyses , *Composite Structures,* 242, p. 112162. Available at: https://doi.org/10.1016/j.compstruct.2020.112162

Mandal, T.K., Parker, J., Gagliano, M. and Martinez-Paneda, E. 2024. Computational predictions of weld structural integrity in hydrogen transport pipelines, *International Journal of Hydrogen Energy.* Available at: https://doi.org/10.1016/j.ijhydene.2024.01.258

Medjdoub, S.M., Bouiadjra, B.B. and Abdelkader, M. 2018. Effect of the geometrical parameters on the efficiency of bonded composite wrap for repairing cracked pipes, *Strength, Fracture and Complexity*, 11(4), pp. 309–317. Available at: https://doi.org/10.3233/SFC-180232

ONLINE FIRST

Meniconi, L.C., Freire, J.L., Vieira, R.D, and Diniz, J.L. 2002. Stress analysis of pipelines with composite repairs, *in International Pipeline Conference*. Available at: https://doi.org/10.1115/IPC2002-27372

Mohammadi, S., Yousefi, M. and Khazaei, M. 2021. A review on composite patch repairs and the most important parameters affecting its efficiency and durability, *Journal of Reinforced Plastics and Composites*, 40(1–2), pp. 3–15. Available at: https://doi.org/10.1177/0731684420941602

Mohammed, B., Noureddine, M. and Youcef, M.A. 2025. Numerical optimization by the PFEMCT-SIF method of the crack propagation of a linear elastic material, *Vojnotehnički glasnik*, 73(1), pp. 136–161. Available at: https://doi.org/10.5937/vojtehg73-52739

Mousa, S., et al. 2023. The efficiency of advanced polymeric composite sleeves in the rehabilitation of cracked pipelines under combined loadings , *Journal of Materials Research and Technology*, 25, pp. 6395–6406. Available at: https://doi.org/10.1016/j.jmrt.2023.07.078

Nasiri, S. and Khosravani, M.R. 2023. Failure and fracture in polyethylene pipes: Overview, prediction methods, and challenges*, Engineering Failure Analysis,* 152, p. 107496. Available at: https://doi.org/10.1016/j.engfailanal.2023.107496

Ngabonziza, Y., Ergun, H., Kuznetsova, R., LI, J., Liaw, B., Delal, F. & Chang, J. 2010. An experimental study of self-diagnosis of interlaminar damage in carbon-fiber composites. *Journal of Intelligent Material Systems and Structures,* 21**,** 233-242.available at: https://doi.org/10.1177/1045389X09347019

Patrick, A.J. 2004 . Composites—case studies of pipeline repair applications, *Pigging Products and Services Association*, 12. Available at: https://ppsa-online.com/papers/2004-London-8-Patrick.pdf

Pengchao, C. 2025. Advancements and future outlook of safety monitoring, inspection and assessment technologies for oil and gas pipeline networks , *Journal of Pipeline Science and Engineering Journal of Pipeline Science and Engineering*. Available at: https://doi.org/10.1016/j.jpse.2025.100267

Qu, H.J., Tao, F., Gu, N., Montoya, T., Taylor, J.M., Schaller, R.F., Schindelholz, E. and Wharry, J.P. 2022 .Crystallographic effects on transgranular chloride-induced stress corrosion crack propagation of arc welded austenitic stainless steel *, npj Materials Degradation*, 6(1), p. 43. Available at: https://doi.org/10.1038/s41529-022-00252-2

Saeedi, A., Motavalli, M. and Shahverdi, M. 2024. Recent advancements in the applications of fiber-reinforced polymer structures in *railway industry—A review, Polymer Composites,* 45(1), pp. 77–97. Available at: https://doi.org/10.1002/pc.27817

Said, J.M., Abdul Rahman, N.L., Jumahat, A., Zahib, Z.M. and Iman Mahadzir, M.Z. 2025. Hydrostatic pressure analysis of yarn composites patch for PVC pipes, *Journal of Mechanical Engineering,* 22(1). Available at: https://doi.org/10.24191/jmeche.v22i1.2921

ONLINE FIRST

Savari, A. 2022. Failure analysis of composite repaired pipes subjected to internal pressure , *Journal of Reinforced Plastics and Composites,* 41(19–20), pp. 745–764. Available at: https://doi.org/10.1177/07316844211070545

Shafaee Fallah, A., Sadeghian, M. and Golmakani, M.E. 2023 .Experimental and numerical study on the strength of repaired steel pipes with composite patches under internal pressure , *Mechanics of Advanced Composite Structures,* 10(2), pp. 437–448. Available at: https://doi.org/10.22075/macs.2023.29108.1459

Sontti, S.G. and Zhang, X. 2023. Numerical insights from a population balance model into the distribution of bitumen residues in industrial horizontal pipes during the hydrotransport of oil sands tailings , *Industrial & Engineering Chemistry Research,* 63(1), pp. 691–705. Available at: https://doi.org/10.1021/acs.iecr.3c03140

Soutis, C. and Hu, F. 1997. Design and performance of bonded patch repairs of composite structure , *Proceedings of the Institution of Mechanical Engineers, Part G: Journal of Aerospace Engineering*, 211(4), pp. 263–271. Available at: https://doi.org/10.1243/0954410971532668

Srilakshmi, R. 2014. Experimental and numerical investigation of adhesively bonded composite patch repair of an inclined center cracked aluminium panel under static and fatigue load . *Department of Mechanical and Aerospace Engineering.* Available at: https://raiith.krc.iith.ac.in/handle/123456789/54450

Stapley, G. 2025. Desiccation shrinkage and cracking modelling of expansive soil using XFEM . *Queensland University of Technology.* Available at: https://doi.org/10.5204/thesis.eprints.255411

Thakur, H.K. and Prasad, G. 2024 .Mode 1, Mode II, and mixed Mode I/II fracture behavior of laminated structures , in *Fracture Behavior of Nanocomposites and Reinforced Laminate Structures. Springer,* pp. 123–155. Available at: https://doi.org/10.1007/978-3-031-68694-8_6

Tian, D., Gong, Y., Li, Z., Zou, L., Zhang, J., Zhao, L. and Hu, N. 2025. A new analytical method for determining J-integral–crack opening displacement curve of DCB specimen with large scale fiber bridging, *Engineering Fracture Mechanics,* 321, p. 111121. Available at: https://doi.org/10.1016/j.engfracmech.2025.111121

Wei, Y., Jin, X., Luo, Q., Li, Q. and Sun, G. 2024. Adhesively bonded joints—a review on design, manufacturing, experiments, modeling and challenges, *Composites Part B: Engineering,* 276, p. 111225. Available at: https://doi.org/10.1016/j.compositesb.2024.111225

Yu, Z., Zhang, J., Shen, J, and Chen, H. 2021. Simulation of crack propagation behavior of nuclear graphite by using XFEM, VCCT and CZM methods , *Nuclear Materials and Energy,* 29, p. 101063. Available at: https://doi.org/10.1016/j.nme.2021.101063

Zarrinzadeh, H., Kabir, M. and Deylami, A. 2017. Crack growth and debonding analysis of an aluminum pipe repaired by composite patch under fatigue loading, *Thin-Walled Structures,* 112, pp. 140–148. Available at: https://doi.org/10.1016/j.tws.2016.12.023

UNDER PEER REVIEW

Zarrinzadeh, H., Kabir, M. and Deylami, A. 2017. Experimental and numerical fatigue crack growth of an aluminium pipe repaired by composite patch, *Engineering Structures,* 133, pp. 24–32. Available at: https://doi.org/10.1016/j.engstruct.2016.12.011

Zhou, W., Ji, X.L., Yang, S., Liu, J. and Ma, L.H. 2021. Review on the performance improvements and non-destructive testing of patches repaired composites, *Composite Structures,* 263, p. 113659. Available at: https://doi.org/10.1016/j.compstruct.2021.113659

Optimizacija popravke zavarenih cevovoda sa površinskim pukotinama pomoću kompozitnog omota zasnovana na metodi konačnih elemenata: uticaj geometrije, svojstava adheziva i unutrašnjeg pritiska na ponašanje pukotine u modu I

Nedir Hachemi[a], **autor za prepisku**, *Noureddine* Mahmoudi[b], *Foudil* Khelil[a], *Abed* Bouadi[c], *Youcef* Moulai Arbi[a]

[a] University of Mustapha Stambouli, Laboratory of Quantum Physics of Matter and Mathematical Modeling (LPQ3M), Mascara, People's Democratic Republic of Algeria

[b] University of Saida Dr. Moulay Tahar, Faculty of Technology, Department of Civil Engineering and Hydraulics, Saida, People's Democratic Republic of Algeria

[c] University of Mustapha Stambouli, Mascara, People's Democratic Republic of Algeria

OBLAST: mašinstvo, materijali
KATEGORIJA (TIP) ČLANKA: originalni naučni rad

Sažetak:

Uvod/cilj: Strukturni integritet cevovoda pod pritiskom često je ugrožen pojavom površinskih pukotina, naročito u zavarenim zonama. Ovaj rad ispituje efikasnost ojačanja kompozitnim omotom pri sanaciji dužinskih polueliptičnih pukotina u zavarenim čeličnim cevovodima izloženim unutrašnjem pritisku. Iako uticaji okoline poput temperature, vlage i hemijskog dejstva nisu modelovani, isti su prepoznati kao ključni faktori koji utiču na dugoročnu izdržljivost kompozitnih popravki.

Metode: Razvijen je trodimenzionalni model konačnih elemenata za zavareni cevovod (spoljašnji prečnik = 1016 mm, debljina = 12,8 mm) sa spoljašnjom polueliptičnom pukotinom (2c = 10,24 mm, a = 2,56 mm). Tehnika virtuelnog zatvaranja pukotine primenjena je za proračun faktora intenziteta napona u modu I pod dejstvom unutrašnjih pritisaka u opsegu od 2 do 12 MPa. Parametarskom analizom ispitan je uticaj dužine omota (100–400 mm), njegove debljine (6–12 mm) i obuhvatnog ugla oko cevi (30°–360°), kao i modula smicanja adheziva, njegove debljine i efekata odlepljivanja.

Rezultati: Povećanje dužine, debljine i obuhvatnog ugla omota dovelo je do smanjenja faktora intenziteta napona, čime je poboljšano ublažavanje

ONLINE FIRST

oterećenja u vrhu pukotine. Veći modul smicanja adheziva poboljšao je prenos opterećenja na interfejsu, dok je prevelika debljina adhezivnog sloja smanjila efikasnost popravke. Lokalizovano odlepljivanje adheziva značajno je povećalo faktore intenziteta napona pod pritiskom, ukazujući na veliku osetljivost učinka popravke na kvalitet vezivanja lepka.

Zaključak: Rad pruža smernice za projektovanje i optimizaciju kompozitnih ojačanja pri sanaciji zavarenih cevovoda. Iako je u radu analiziran pravougaoni omot, buduća istraživanja bi trebalo da obuhvate alternativne geometrijske oblike u cilju smanjenja koncentracije opterećenja na ivicama, kao i da uzmu u obzir uticaje okoline i zamora materijala radi pouzdanije dugoročne procene.

Ključne reči: popravka cevovoda zavarivanjem, ojačanje kompozitnim omotom, faktor intenziteta napona (FIN), širenje pukotine, metoda konačnih elemenata (MKE).

Paper received on: 27 May 2025.
Manuscript corrections submitted on: 17 August 2025.
Paper accepted for publishing on: 8 September 2025.

© 2026 The Authors. Published by Vojnotehnički glasnik / Military Technical Courier (www.vtg.mod.gov.rs).This article is an open access article distributed under the terms and conditions of the Creative Commons Attribution license (http://creativecommons.org/licenses/by/4.0/rs/

ONLINE FIRST