Radomir Jovičić[1], Dejan Jovičić[2], Simon Sedmak[3], Svetlana Štrbački[4], Milorad Zrilić[5], Andreas Gartner[6]

WELDING AND TESTING OF WELDED JOINTS MADE OF HARDOX 400

ZAVARIVANJE I ISPITIVANJE ZAVARENOG SPOJA ČELIKA HARDOX 400

Originalni naučni rad / Original scientific paper
UDK / UDC: 621.791.05:669.14.018.62

Rad primljen / Paper received:
Januar 2018.

Ključne reči: Hardox 400, tehnologija zavarivanja, mehaničke osobine spoja, mikrostruktura

Izvod

Čelici HARDOX imaju široku primenu za izradu opreme izložene habanju. Visoku otpornost na habanje ovi čelici postižu zahvaljujući velikoj tvrdoći i čvrstoći uz odličnu žilavost. Povećanje tvrdoće i čvrstoće čelika je obično praćeno pogoršanjem njihove zavarljivosti. Međutim, čelici HARDOX se odlikuju dobrom zavarljivošću, zahvaljujući relativno niskoj vrednosti njihovog ugljeničnog ekvivalenta. U radu su date preporuke za izradu tehnologije zavarivanja čelika HARDOX 400 i prikazani su rezultati ispitivanja spoja namenjenog za kvalifikaciju tehnologije zavarivanja. Spoj je zavaren dodatnim materijalom niže čvrstoće od čvrstoće osnovnog materijala, zbog čega tehnologija zavarivanja i procedura njene kvalifikacije imaju specifičnosti.

1. UVOD

HARDOX čelici su čelici švedskog proizvođača SSAB Oxelősund AB, namenjeni za rad u uslovima visokih opterećenja na habanje, u različitim klimatskim uslovima i u različitim okruženjima. Ovi čelici se koriste za izradu delova mašina i opreme koji su izloženi habanju, npr. delova bagera, utovarivača, kipera, transportera, miksera i drobilica. Čelici HARDOX produžavaju vek upotrebe ove opreme i smanjuju troškove njenog održavanja. Visoku otpornost na habanje ovi čelici postižu zahvaljujući velikoj tvrdoći i čvrstoći uz

Adresa autora / Author's address:
[1 i 3] Inovacioni centar Mašinskog fakulteta u Beogradu, Beograd, Srbija. Innovation Center of Faculty of Mechanical Engineering, Belgrade, Serbia
[2]MFGO, Fabrika građevinske opreme, Mladenovac, Srbija MFGO, Construction equipment manufacturer, Mladenovac, Serbia
[4]KonMat, Beograd, Srbija. KonMat, Belgrade, Serbia
[5]Tehnološko metalurški fakultet Univerziteta u Beogradu, Beograd, Srbija. Faculty of Technology and Metallurgy, University of Belgrade, Serbia
[6]Stetter GmbH, Memmingen, Nemačka. Stetter GmbH, Memmingen, Germany

Key words: Hardox 400, welding technology, mechanical properties of welded joints, micro-structure

Abstract

HARDOX steels are wudely used in manufacturing of equipment exposed to wear. High wear resistance of these steels is achieved by their increased hardness and strength, along with exceptional toughness. Increased hardness and strength of such steels is usually accompanied by decreased weldability. However, HARDOX steels have good weldability, thanks to a relatively low carbon equivalent value. In this paper, recommendations for developing a welding technology for steel HARDOX 400 are presented, along with the results of tests performed on a welded joint made for the purpose of welding procedure qualification. The joint was welded using additional materials with strength below that of the parent material, and due to this, the welding technology and the procedure of determining its qualification were specific.

1. INTRODUCTION

HARDOX steels are manufactured by Swedish company SSAB Oxelősund AB, and are meant to work under considerable wear loads, in varying climate conditions and different environments. These steels are used for manufacturing of machine and equipment parts subbjected to wear, such as dredges, loaders, tip lorries, transporters, mixers and grinders. HARDOX steels increase the work life of such equipment and reduce its maintenance costs. High wear resistance of these steels is achieved due to their increased hardness, odličnu žilavost. Tvrdoća čelika HARDOX se kreće od 370 do 640 HB, napon tečenja od 850 do 1250 MPa, a žilavost od 20 do 95 J na – 40^{o}C, zavisno od klase čelika. Povećanje tvrdoće i čvrstoće čelika je obično praćeno pogoršanjem njihove zavarljivosti. Međutim, i pored visoke tvrdoće i čvrstoće, čelici HARDOX se odlikuju dobrom zavarljivošću, što je posledica relativno niske vrednosti njihovog ugljeničnog ekvivalenta. Ovi čelici se mogu zavariti svim konvencionalnim postupcima zavarivanja ukoliko se izabere odgovarajući dodatni materijal i obezbede dovoljno nizak sadržaj vodonika u spoju, odgovarajuće vreme hlađenja u temperaturnom intervalu 800 – 500^{o}C i spreči nastanak većih zaostalih napona.

2. EKSPERIMENT

Ispitni spoj je zavaren kao sučeoni spoj između ploča dimenzija 350 x 300 x 4 mm, izrađenih od čelika HARDOX 400. U tabeli 1. je dat hemijski sastav ovog čelika [1, 2], a u tabeli 2. su date njegove mehaničke osobine [1, 2]. Na slici 1. je prikazana mikrostruktura čelika HARDOX 400.

strength and exceptional toughness. HARDOX steel hardness ranges between 370 and 640 HB, its yield stress ranges between 850 and 1250 Mpa, whereas its toughness is between 20 and 95 J at -40°C, depending on steel class. Increased hardness and strength of such steels is usually accompanied by decreased weldability. However, HARDOX steels have good weldability, thanks to a relatively low carbon equivalent value. These steels can be welded using all of the conventional procedure assuming the additional material is properly selected, and that low hydrogen content is ensured in the welded joint, along with adequate cooling time for the temperature interval of 800 – 500°C, in order to prevent significant residual stresses from occurring.

2. EXPERIMENT

The joint that was tested was welded as a butt joint between plates with dimensions of 350 x 300 x 4 mm, made of HARDOX 400 steel. Table 1 shows the chemical composition of this steel [1,2], whereas table 2 shows its mechanical properties [1,2]. Shown in figure 1 is the micro-structure of this steel.

C	Si	Mn	P	S	Al	Cu	Cr	Ni	Mo	N	B	CET
≤ 0,15	≤ 0,70	≤ 1,60	≤ 0,025	≤ 0,010	-	-	≤ 0,50	≤ 0,25	≤ 0,25	-	≤ 0,004	-
0,147	0,22	1,21	0,010	0,001	0,031	0,011	0,75	0,04	0,005	0,004	0,0018	0,31

***Tabela 1.** Hemijski sastav čelika HARDOX 400 (%)*
***Table 1.** Chemical composition of steel HARDOX 400 (%)*
Napomena: prvi red se odnosi na literaturu [1], a drugi na literaturu [2]
Note: first row refers to literature [1], whereas the second one is from [2]

Tvrdoća HB	Napon tečenja σ_p MPa	Izduženje A %	Udarna žilavost ISO - V
370 - 430	1000	10	45 J na – 40^{o}C
389	-	-	-

***Tabela 2.** Mehaničke osobine čelika HARDOX 400*
***Table 2.** Mechanical properties of steel HARDOX 400*
Napomena: prvi red se odnosi na literaturu [1], a drugi na literaturu [2]
Note: first row refers to literature [1], whereas the second one is from [2]

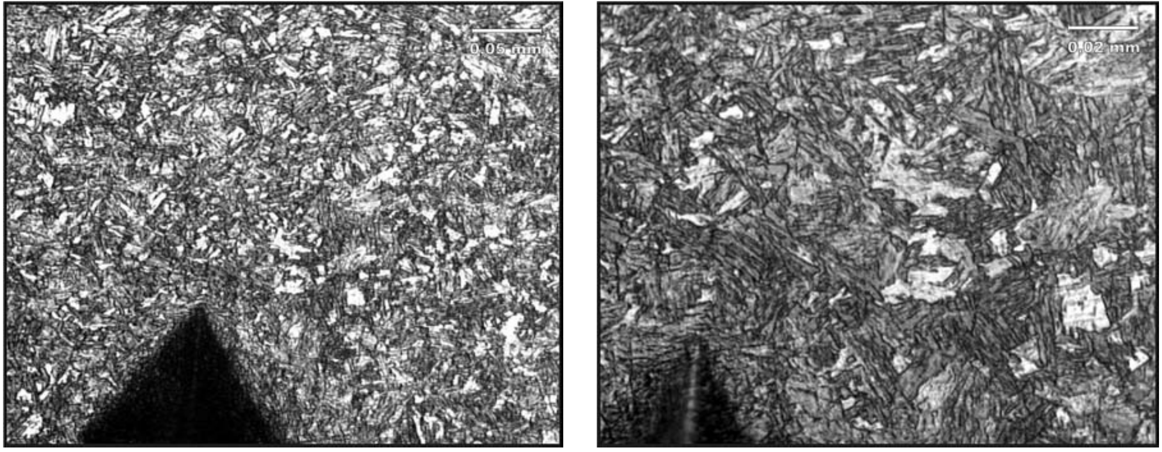

a) 200 X b) 500 X

***Slika 1.** Mikrostruktura čelika HARDOX 400, struktura otpuštenog martezita*
***Figure 1.** Micro-structure of steel HARDOX 400, tempered martensite structure*

Čelik HARDOX 400 spada u čelike koji, zbog visoke tvrdoće i čvrstoće i martenzitne mikrostrukture, pokazuju sklonost ka nastanaku hladnih prslina u zoni uticaja toplote (ZUT). Rizik od nastanka ovih prslina se smanjuje upotrebom dodatnih materijala (DM) čiji napon tečenja ne prelazi 500 MPa [1]. Upotrebom DM, koji imaju znatno manju čvrstoću od čvrstoće osnovnog materijala (OM), smanjuju se zaostali naponi u spoju na račun plastične deformacije metala šava (MŠ). To smanjuje rizik od nastanka hladnih prslina. Prema literaturi [3, 4] maksimalna vrednost zaostalih napona, u ovom slučaju, je jednaka naponu tečenja MŠ. Za zavarivanje čelika HARDOX 400 mogu se upotrebiti i niskougljenični i visokolegirani austenitni DM, koji imaju napon tečenja manji od 500 MPa. Prednost upotrebe austenitnih DM je u daljem smanjenu rizika od nastanka hladnih prslina na račun povećane rastvorljivosti vodonika u austenitnom MŠ. Na taj način se smanjuje njegova koncentracija u ZUT i time i rizik od nastanka hladnih prslina. Nedostatak austenitnih DM je oko pet puta veća cena u odnosu na niskougljenične. Ako je MŠ izložen intenzivnom habanju potrebna otpornost na habanje i potreban radni vek spoja se postižu zavarivanjem poslednjeg sloja DM koji obezbeđuje visoku tvrdoću. U ovom eksperimentu, za zavarivanje je odabran MAG postupak, a na osnovu iznetih smernica je izabran DM EMK 8 (G 46 4 M 21 4 Si1- klasifikacija po EN ISO 14341 A) proizvođača BOHLER. Hemijski sastav DM je dat u tabeli 3., a u tabeli 4. su date mehaničke osobine njegovog čistog MŠ [5].

HARDOX 400 steel belongs to a group of steels that, due to their high strength, toughness and martensitic structure, exhibit vulnerability to cold crack initiation in the heat affected zone (HAZ). The risk of such cracks is reduced by using additional materials whose yield stress does not exceed 500 MPa [1]. By using additional materials whose strength is significantly below that of the parent material (PM), residual stresses are reduced at the expense of plastic strain in the weld metal. This reduces the risk of cold crack initiation. According to literature [3,4], maximum value of residual stresses is, in this case, equal to the WM yield stress. Both low and high-alloyed austenitic additional materials can be used for the purpose of welding HARDOX 400 steel, as long as their yield stress is below 500 MPa. The advantage of using austenitic materials is reflected in additional decrease of risk of cold crack initiation at the expense of increased hydrogen solubility in the austenitic weld metal. In this way, its concentration in the HAZ is reduced, resulting in decreased risk of cold crack initiation. The disadvantage of austenitic additional materials is that they are about five times more expensive than low-alloyed steels. In the case that the WM is subjected to considerable wear, required wear resistance and work life of the welded joint are achieved by welding of the final additional material layer, which provides increased hardness. In this experiment, welding was performed using the MAG procedure, and based on the guidelines presented here, EMK8 (G 46 4 M 21 4 Si1 according to EN ISO 14341 A), manufactured by BOHLER was selected as the additional material. Chemical composition of the additional material is given in table 3, whereas table 4 contains the mechanical properties of its pure WM [5].

C	Si	Mn
0,1	1,0	1,7

Tabela 3. *Hemijski sastav dodatnog materijala EMK 8 (%)*
Table 3. *Chemical composition of the additional material EMK 8 (%)*

Napon tečenja σ_p MPa	Zatezna čvrstoća σ_m MPa	Izduženje A %	Udarna žilavost ISO – V (J)	
			+ 20°C	- 40°C
≥ 460	530 - 680	≥ 20	150	≥ 47

Tabela 4. *Mehaničke osobine čistog metala šava dodatnog materijala EMK 8*
Table 4. *Mechanical properties of pure weld metal made of additional material EMK 8*

Vreme hlađenja između 800 i 500°C ($t_{8/5}$) ima presudnu ulogu na formiranje konačne mikrostrukture u ZUT čelika. Proizvođač čelika HARDOX 400 preporučuje da ovo vreme ne bude kraće od 3 sec. [6], jer se kraće vreme hlađenja negativno odražava na udarnu žilavost ZUT. Na veličinu vremena $t_{8/5}$ utiču temperatura OM,

Cooling time for the temperature interval between 800 and 500°C ($t_{8/5}$) is of crucial importance for the forming of the final HAZ micro-structure. HARDOX 400 steel manufacturer recommends that this time should not be shorter than 3 s [6], since short cooling time decreases the impact toughness HAZ. The duration of $t_{8/5}$ is affected by the temperature njegova debljina i pogonska energija zavarivanja tj. količina unete toplote. Preporuka proizvođača [6] je da se čelik HARDOX 400 ne predgreva do debljina od 20 mm, ukoliko je ambijentala temperatura približno 20°C. U tim uslovima preporučena pogonska energija zavarivanja, za lim debljine 4 mm, iznosi 0,5 KJ/mm. U slučajevima da je ambijentalna temperatura niža od + 5°C, da je relativna vlažnost vazduha viša od 40% i da se zavaruju uklješetni spojevi tj. spojevi koji se ne mogu slobodno skupljati pri hlađenju, potrebno je predgrevanje OM. Predgrevanjem se vreme $t_{8/5}$ produžava i dovodi na preporučenu vrednost, uklanja se vlaga adsorbovana na površini OM čime se smanjuje sadržaj vodonika u spoju i smanjuju se zaostali naponi. Navedene preporuke važe i za zavarivanje pripoja pod uslovom da im dužina nije manja od 50 mm.

Kao zaštitni gas za zavarivanje čelika HARDOX 400, MAG postupkom mogu se koristiti CO_2 ili mešavine Ar sa 15-25% CO_2. Mešavine Ar i CO_2, u odnosu na čist CO_2 imaju višu cenu, ali daju stabilniji luk, lepši vizuelni izgled šava i smanjuju razbrizgavanje. Prednosti CO_2, kao što su sigurnije provarivanje i sigurnije bočno uvarivanje, kod lima debljina 4 mm, što je slučaj u ovom eksperimentu, ne dolaze do izražaja.

Ispitni spoj je zavaren MAG postupkom u zaštitnom gasu 82% Ar – 18% CO_2, pri protoku od 10 – 12 l/min. Ivice žleba i njihova okolina su prethodno očišćene brušenjem. Da bi se uklonila vlaga apsorbovana na površini OM, ivice žleba su osušene plamenom kiseonika i acetilena. Osnovni materijal nije predgrevan jer je zavarivanje izvedeno pri ambijentalnoj temperaturi od oko 20°C. Spoj je zavaren kao jednoprolazni u I žlebu sa zazorom od 1 mm. Parametri zavarivanja su dati u tabeli 5. Korišćena je tehnika zavarivanja ulevo.

and thickness of the PM and welding energy, i.e. heat input. Manufacturer recommendation [6] is to not preheat steel HARDOX 400 if its thickness is up to 20 mm and the ambient temperature is approximately 20°C. Under these conditions, recommended welding energy, for a 4 mm thick sheet, is 0.5 kJ/m. In the case that the ambient temperature is below +5°C, relative humidity is above 40%, and the welded joints are fixed, i.e. they cannot freely contract during the cooling, preheating of the PM is necessary. By preheating, the $t_{8/5}$ duration is extended and reaches the recommended value. In addition, moisture adsorbed on the PM surface is removed, thus decreasing the hydrogen content of the weld, along with the residual stresses. Recommendations mentioned previously apply to tack welds, assuming that their length is no less than 50 mm.

During MAG welding of HARDOX 400 steel, a mixture of Ar and 15-25% CO_2, or pure CO_2 are used as shielding gases. Compared to pure CO_2, Ar and CO_2 mixture provides a more stable arc, smoother weld and fewer spatters, but are also more expensive. The advantages of CO_2, such as safer penetration are not noticeable in the case of sheets with a thickness 4 mm. Tested welded joint was made using MAG procedure with 82% Ar – 18 CO_2 mixture as the shielding gas, with the flow rate of 10-12 l/min. Groove edges and their vicinity were previously cleaned by grinding. In order to remove the moisture absorbed by the PM surface, groove edges were cleaned using oxygen and acetylene flame. The parent material was not preheated since welding was performed at an ambient temperature of around 20°C. The joint was welded in a single pass, with an I groove that had a 1 mm gap. Welding parameters are given in table 5. Welding was performed in the left direction.

Prečnik dodatnog materijala (mm)	Struja A	Napon V	Vrsta struje/polaritet	Brzina zavarivanja mm/min	Uneta toplota KJ/mm
1,0	185-190	22-23	DC +	390 - 410	0,51

Tabela 5. *Parametri zavarivanja ispitnog spoja*

Table 5. *Welding parameters for the tested welded joint*

3. REZULTATI ISPITIVANJA I DISKUSIJA

Ispitivanje spoja i ocena rezultata ispitivanja su urađeni u skladu sa standardom za kvalifikacije tehnologije zavarivanja [7] i sa standardima na koje se poziva ovaj standard. Vizuelno dimenzionom kontrolom i radiografskim ispitivanjem, u spoju, nisu otkrivene neprihvatljive greške za nivo kvaliteta B [8].

Zatezne karakteristike spoja u celini su određene ispitivanjem tri glatke pljosnate epruvete sa paralelnim bokovima. Oblik i dimenzije epruveta su

3. TEST RESULTS AND DISCUSSION

Testing of the welded joint and the evaluation of results were performed in accordance with the standard for welding technology qualification [7], as well as with standards that are referenced in it. Visual dimension control and radiographic testing of the welded joint did not reveal defects unacceptable for B level quality [8].

Tensile properties of the welded joint as a whole are determined by testing of three smooth flat specimens with parallel sides. Shape and dati na slici 2. Epruvete su ispitane na kidalici INSTRON 1332 maksimalne sile 100 KN. Rezultati ispitivanja su dati u tabeli 6.

dimensions of these specimens are shown in figure 2. Specimens were tested using an INSTRON 1332 tensile test machine with a maximum force of 100 kN. Test results are shown in table 6.

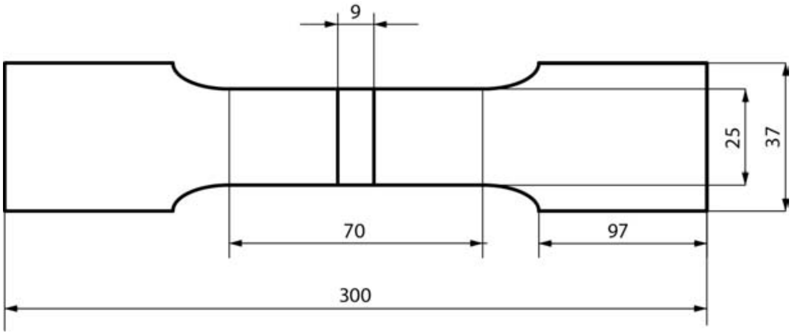

Slika 2. *Oblik i dimenzije epruveta za ispitivanje zatezanjem spoja u celini*
Figure 2. *Shape and dimensions of specimens used for tensile testing of the welded joint as a whole*

Na slici 3. je dat dijagram σ – ε, dobijen pri ispitivanju epruvete br. 1. Dijagram je karakterističan za sve tri epruvete. Na slici 4. je prikazana epruveta br. 1. nakon loma. Sa slike se vidi da je celokupna deformacija skoncentrisana u MŠ. Tamne linije na slici pretstavljaju linije stapanja tj. granice MŠ. Lom se, na ovakav način, odvijao u sve tri epruvete.

Shown in figure 3 is the σ – ε diagram, obtained by testing of specimen no. 1. The diagram is characteristic of all three specimens. Figure 4 shows specimen no. 1 after fracture. It can be seen from this figure that the total strain was concentrated in the WM. Dark lines in the figure represent fusion lines, i.e. the boundaries of the WM. The fracture occurred in this way in all three specimens.

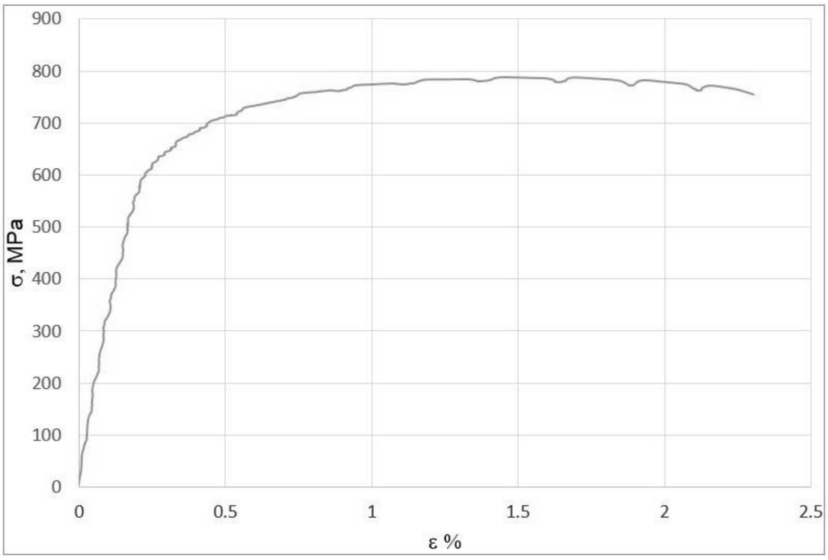

Slika 3. *Dijagram σ – ε, dobijen pri ispitivanju epruvete br. 1.*
Figure 3. *σ – ε - diagram, obtained from test specimen no. 1.*

Epruveta broj	Napon pri 0,2% deformacije MPa (nije garantovano)		Zatezna čvrstoća σ_m MPa		Izduženje A % (nije garantovano)		Mesto loma
	pojedinačno	srednja vrednost	pojedinačno	srednja vrednost	pojedinačno	srednja vrednost	
1	673	682	787	779	2,3	2,2	metal šava
2	683		764		2,2		"
3	690		787		2,1		"

Tabela 6. *Vrednosti napona u karakterističnim tačkama dijagrama σ – ε*
Table 6. *Stress values in characteristic points on the σ – ε diagram*

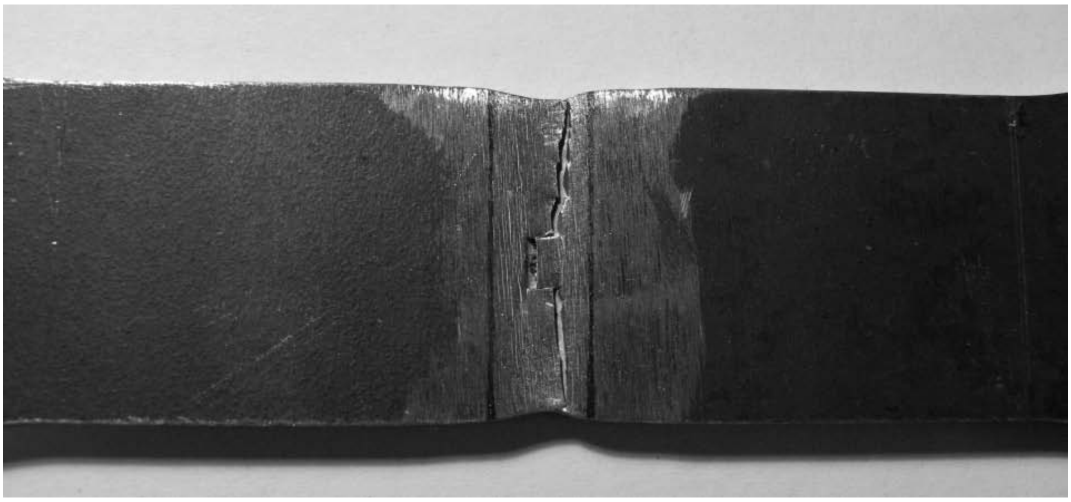

Slika 4. *Izgled epruvete br. 1. nakon loma*
Figure 4. *Appearance of specimen no.1 after fracture*

Ispitivanje savijanjem je urađeno prema zahtevima standarda [9]. Ispitane su tri epruvete savijanjem oko trna radijusa 36 mm, slika 5.a). Slika 6.a) prikazuje epruvetu br. 4. nakon savijanja. Sa slike se vidi da je deo epruvete između oslonaca nejednako deformisan i da je deformacija skoncentrisana u MŠ. Ovakva deformacija dovodi do pojave neprihvatljivih grešaka pri uglu savijanja manjem od 180° [7], slika 6.c). Zbog toga je ispitivanje savijanjem ponovljeno, na tri epruvete, savijanjem valjkom oko trna, slika 5.b) [9]. Na slici 6.b) je prikazana epruveta br. 7. nakon savijanja. Sa slike se vidi da je deformacija epruvete ravnomerna. U ovom slučaju se u MŠ nisu pojavile neprihvatljive greške do ugla savijanja od 180°, slika 6.d).

Bending tests were performed in accordance with the standard [9] requirements. Three specimens were tested by bending around a mandrel with a radius of 36 mm, figure 5.a). Figure 6.a) shows specimen no. 4 after bending. It can be seen from this figure that the part of the specimen between the supports is unequally deformed and that the strain is concentrated in the WM. Such strain leads to the occurrence of unacceptable defects for bending angles less than 180° [7], figure 6.c). Due to this, the tests were repeated, with three specimens, by bending around the mandrel, using a roller, figure 5.b). Figure 6.b) shows specimen no. 7 after bending. It can be seen from this figure that the strain in the specimen was uniform. In this caste, no unacceptable defects have occurred in the WM for bending angles up to 180°, figure 6.d).

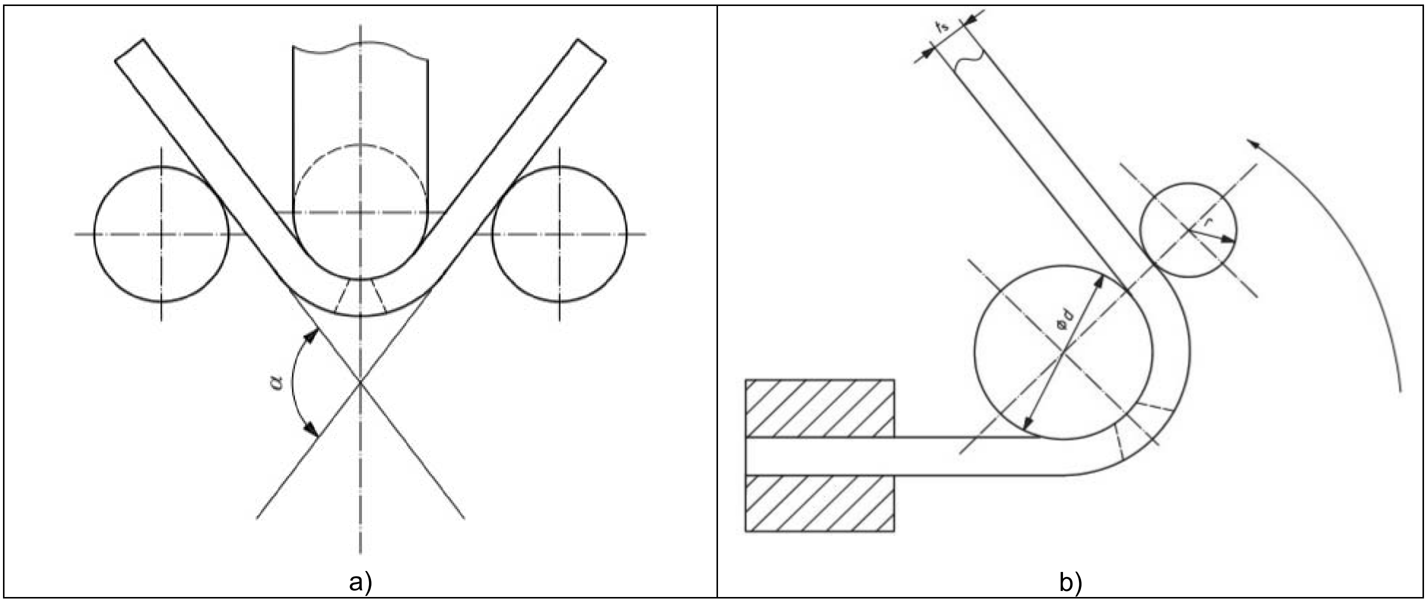

a) b)

Slika 5. *Ispitivanje savijanjem: a) oslanjanjem u tri tačke, b) valjkom oko trna*
Figure 5. *Bending tests: a) supported in three points, b) by roller around the mandrel*

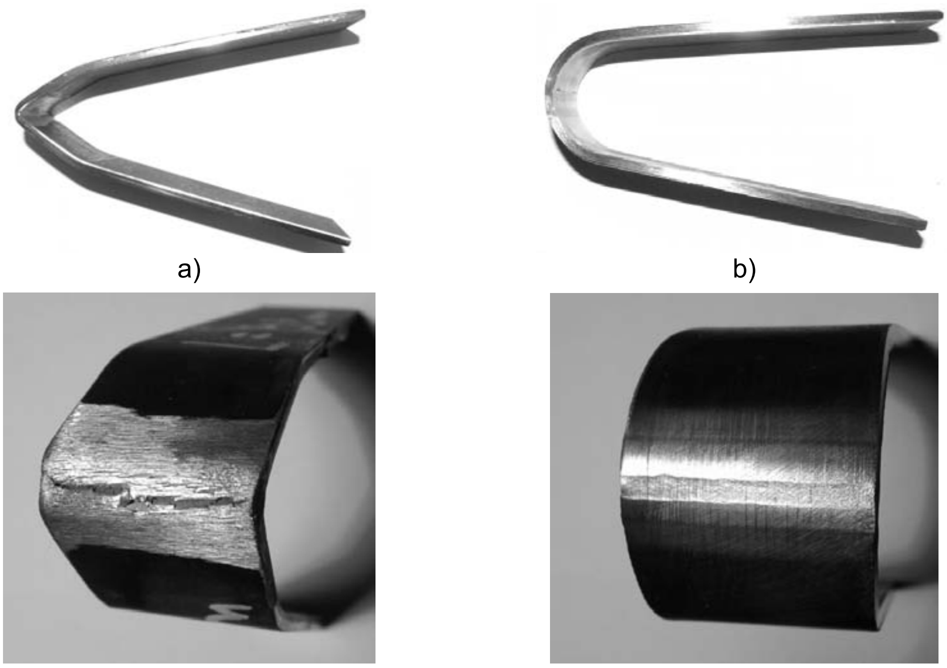

Slika 6. *Izgled epruveta nakon savijanja: epruveta br.4 a), epruveta br.7 b), izgled zategnute zone: epruveta br. 4.c), epruveta br.7 d)*
Figure 6. *The appearance of specimens after bending: specimen no. 4. a), specimen no. 7. b), The appearance of the tensile zone: specimen no.4 c), specimen no.7 d)*

Slika 7. prikazuje makrostrukturu zavarenog spoja. Sa slike se vidi da spoj zavaren kao jednoprolazni i da u spoju nema grešaka kao što su ivični zajedi, poroznost, uključci troske i prsline.

Figure 7 shows the macro-structure of the welded joint. From this figure it can be seen that the joint was welded in a single pass and it does not contain defects such as edge notches, porosity, slag inclusions and cracks.

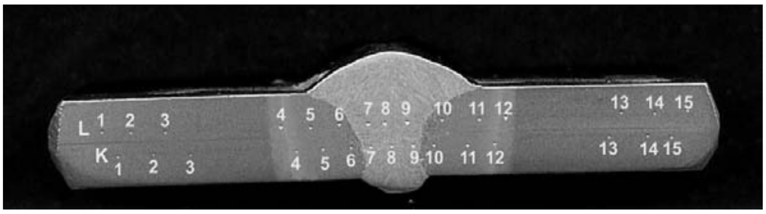

Slika 7. *Makrostruktura i raspored mesta merenja tvrdoća u ispitnom spoju*
Figure 7. *Macro-structure and distribution of hardness measuring locations in the tested welded joint*

Tvrdoće u spoju i u OM su određene na uzorku, koji je korišćen za ispitivanja makro i mikrostruktura. Tvrdoće su određene Vikersovom metodom pri opterećenju 10 daN (15s). Pošto je uzorak pre određivanja tvrdoća bio nagrižen na njemu su se jasno razlikovali OM, ZUT i MŠ, čime je omogućeno da se tačno odredi u koju zonu spoja pada svaki pojedinačni otisak. Raspored mesta merenja tvrdoća je prikazan na slici 7., a rezultati merenja su dati u tabeli 6. i na slici 8.

Hardness of the welded joint and the parent material were determined using the specimen for macro and micro-structure testing. Hardness was determined using the Vickers method, with a load of 10 kN (15s). Since the specimen was corroded prior to hardness testing, it was possible to clearly distinguish between the PM, HAZ and WM, which enabled the accurate determining of which individual imprint corresponds to which zone. Distribution of hardness measuring locations is given in figure 7, whereas the results can be seen in table 6 and figure 8.

	OM 1	OM 2	OM 3	ZUT 4	ZUT 5	ZUT 6	MŠ 7	MŠ 8	MŠ 9	ZUT 10	ZUT 11	ZUT 12	OM 13	OM 14	OM 15
Linija L	401	383	383	228	297	285	236	236	236	285	309	221	383	401	401
Linija K	401	383	366	322	297	285	213	213	228	297	297	285	383	383	401

Tabela 7. *Rezultati merenja tvrdoća u ispitnom spoju (HV10)*
Table 7. *Results of hardness measuring in the tested weld joint (HV10)*

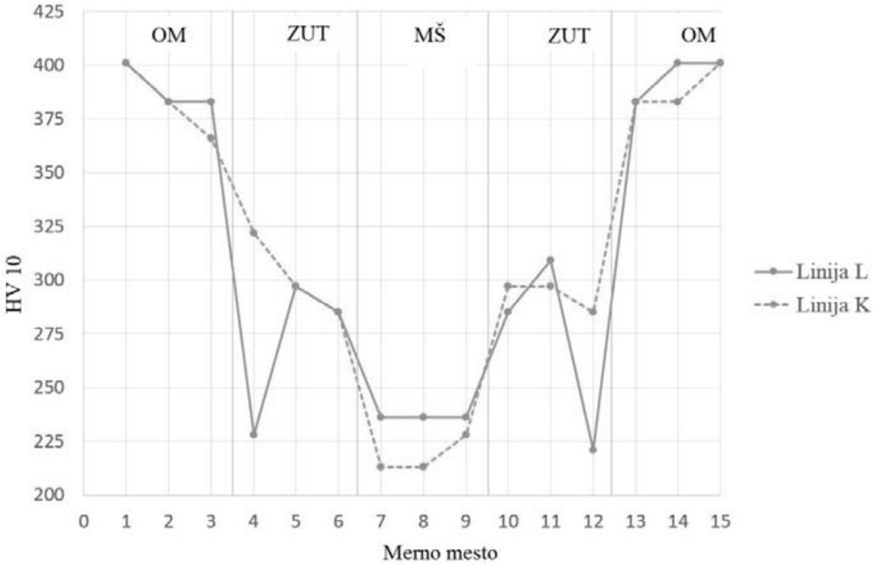

Slika 8. *Dijagram raspodele tvrdoća po poprečnom preseku spoja*
Figure 8. *Diagram of hardness distribution along the welded joint lateral cross-section*

Mikrostrukture su ispitane na svetlosnom metalografskom mikroskopu Jenavert Carl Zeiss Jena pri povećanjima 200X i 500X, tehnikom svetlosnog polja. Karakteristične mikrostrukture OM su prikazane na slici 1., a karakteristične mikrostrukture ZUT i MŠ su prikazane na slikama 9. a do f. Tamna polja na slikama 9. a do f predstavljaju tragove otisaka od merenja tvrdoća.

Micro-structures were tested using a light metallographic microscope Jenavert Carl Zeiss Jena, with magnifications of 200X and 500X, via light field technique. Characteristic WM micro-structures are shown in figure 1, whereas the characteristic micro-structures of the HAZ and WM are shown in figures 9.a-f. Dark fields in these figure represent the traces of hardness measuring imprints.

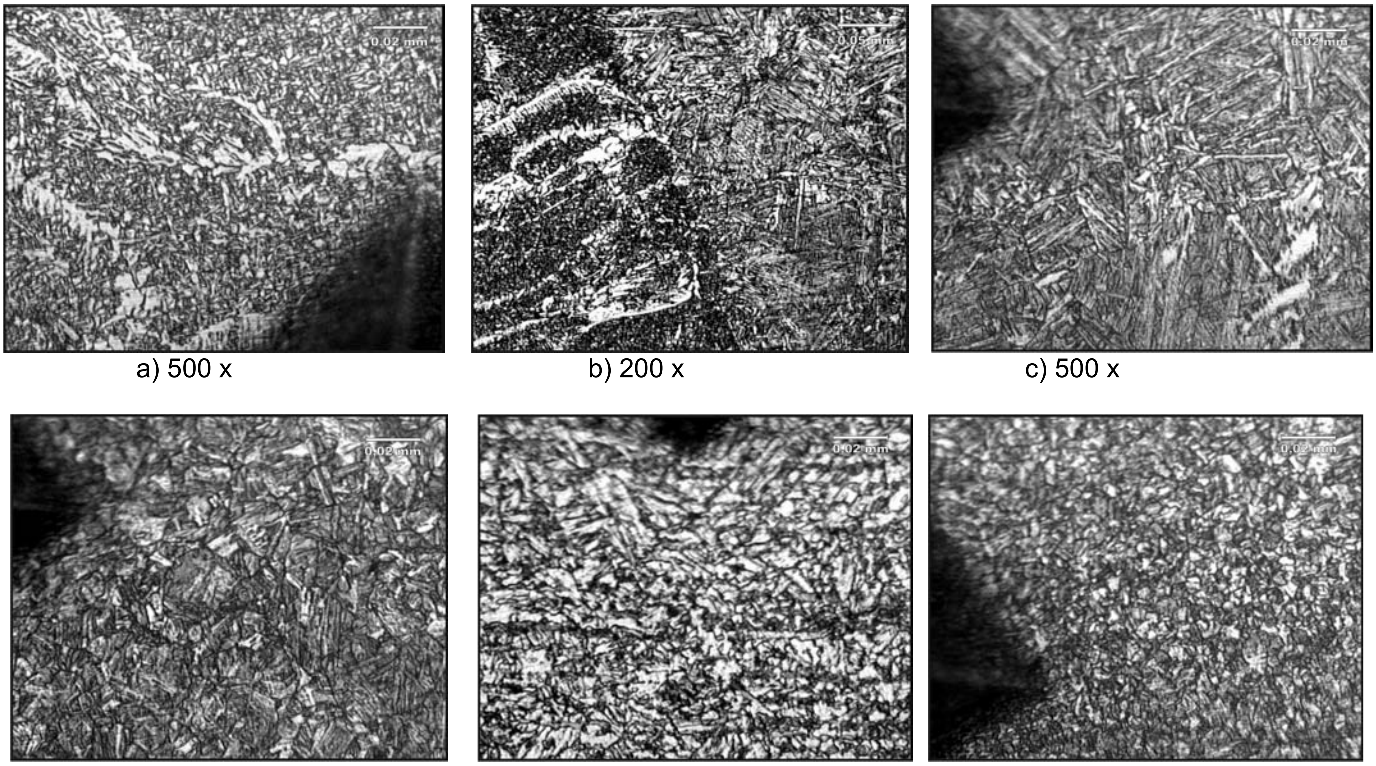

a) 500 x b) 200 x c) 500 x

d) 500 x e) 500 x f) 500 x

Slika 9. *Mikrostrukture: a) metal šava, b) linija stapanja - matal šava, c - f) zona uticaja toplote*
Figure 9. *Micro-structures: a) weld metal, b) fusion line – weld metal, c - f) heat affected zone*

Metalografskim ispitivanjem je konstatovano da OM ima strukturu otpuštenog martenzita koja je homogena po celoj debljini materijala. Ovom strukturnom stanju odgovaraju izmerene vrednosti tvrdoća u OM, koje se kreću od 366 do 401 HV, tabela 7. Metal šava ima strukturu fino dispergovanog perlita sa prisutnim feritom, koja je homogena po celom preseku. Tvrdoće MŠ se kreću od 213 do 236 HV i odgovaraju uočenoj mikrostrukturi. Struktura ZUT je složenija. Mikrostruktura na pozicijama mernih tačaka 5, 6, 10 i 11, slika 7., je grubozrna i uglavnom je beinitna. Ove mikrostrukture su prikazane na slikama 9.c) merno mesto L10 i 9.d) merno mesto L11. Ispitivanjem je konstovano da je metalno zrno krupnije u blizini linije stapanja i da se usitnjava udaljavanjem od ove linije ka OM. Tvrdoće izmerene u ovom delu ZUT se kreću od 285 do 309 HV i odgovaraju uočenim mikrostrukturama. U sitnozrnom delu ZUT uz OM, merna mesta L4 i L12, se u strukturi pojavljuje i perlitni mikrokonstituent, slika 9.e). U ovom delu ZUT su izmerene najniže tvrdoće, 221 do 228 HV. Slika 9.f) prikazuje mikrostrukturu karakterističnu za merna mesta K4 i K12, koja se nalaze na samom kraju grubozrnog ZUT. Ovde je uglavnom prisutna sitnozrna beinitna mikrostruktura, čije se tvrdoće kreću od 285 do 322 HV. Mikrostrukture u zonama od mernih mesta K4 i K12 ka OM, su sitnozrne sa perlitnim mikrokonstituentom i iste su kao strukture koje su opisane na mernim mestima L4 i L12.

Pri ispitivanju zateznih karakteristika spoja u celini, u slučajevima kada DM ima veću čvrstoću od čvrstoće OM, zahteva se da se lom epruvete odvije u OM [7]. Međutim, kada se koristi DM niže čvrstoće od čvrstoće OM, kao u ovom eksperimentu, prihvatljiv rezultat je lom u MŠ [7]. Sa slike 4. se vidi da je do loma epruvete došlo u MŠ, a iz tabela 2, 4 i 6 se vidi da je do loma došlo pri naponu koji je veći od deklarisane zatezne čvrstoće DM (čist MŠ), a manji od napona tečenja OM. Veća čvrstoća MŠ u odnosu na deklarisane osobine DM se može objasniti povećanjem sadržaja ugljenika u MŠ. S obzirom da OM ima veći sadržaj ugljenika u odnosu na DM i da je, zbog I oblika žleba i malog zazora u korenu udeo OM u MŠ veliki (40 – 50%), može se očekivati značajniji porast sadržaja ugljenika u MŠ, što dovodi do povećanja njegove čvrstoće. I napon pri kome je u MŠ zabeležena trajna plastična deformacija od 0,2% je znatno veći od napona tečenja DM (tabele 4. i 6). Veličinu napona pri kome se odvija trajna plastična deformacija u MŠ treba prihvatiti uslovno zbog toga što merni deo epruvete čine materijali različitih karakteristika (OM, ZUT i MŠ).

Metalographic tests determined that the PM has a tempered martensite structure which is homogeneous along the whole thickness. Measured hardness values in the PM correspond to this structural state, ranging from 366 to 401 HV, table 7. Weld metal has a finely dispersed pearlite with ferrite structure, homogeneous along the whole cross-section. Hardness of the WM ranges from 213 to 236 HV and correspond to the observed micro-structure. The structure of the HAZ is more complex. Micro-structure at measuring locations 5, 6, 10 and 11, figure 7, is coarse-grain and mostly beinite. These micro-structures are shown in figures 9.c) for measuring location L10 and 9.d) for measuring location L11. Tests have determined that the metallic grain is larger near the fusion line and that its size decreases with distance from this line, towards the PM. The hardness measured in this part of the HAZ ranges from 285 to 309 HV, which corresponds to the observed micro-structures. In the fine-grain part of the HAZ, adjacent to the PM, measuring locations L4 and L12, micro-structures also contain pearlite micro-constituents, figure 9.e). The lowest values of hardness were measured in this part of the HAZ, ranging from to 221 to 228 HV. Figure 9.f) shows the micro-structure characteristic of measuring locations K4 and K12, which are located at the very end of the coarse-grain HAZ. A fine-grain beinite micro-structure is mostly present in this part, with hardness ranging from 285 to 322 HV. Micro-structures in the zones from measuring locations K4 and K12 towards the PM, are fine-grain with pearlite micro-constituents and are the same as the structures described at measuring locations L4 and L12. During the testing of tensile properties of the welded joint as a whole, in the case when the additional material's strength is above that of the PM, it is required that fracture take place in the PM [7]. However, when using additional materials with lower strength compared to the PM, as in this experiment, fracture in the WM is also acceptable [7]. From figure 4, it can be seen that fracture occurred in the WM, and tables 2, 4 and 6 indicate that it occurred at stress levels above the declared tensile strength of the additional material (pure WM) and below the PM yield stress. Higher WM strength compared to the declared properties of the additional material can be explained by the increased carbon content in the WM. Taking into account that the PM has higher carbon content compared to the additional material and that, due to the shape of the groove and a small gap in the root, the percentage of PM in the WM is considerable

Međutim, ovaj podatak i raspodela deformacija duž mernog dela epruveta, slika 4., omogućavaju da se razume tok deformacije spoja.

Povećanje napona pri kome započinje plastična deformacija MŠ, utiče na povećanje nivoa zaostalih napona u spoju što povećava njegovu sklonost ka pojavi hladnih prslina. Zaostali naponi se, u ovom slučaju, mogu smanjiti smanjenjem stepena mešanja OM i DM, povećanjem zazora u žlebu i delimičnim zakošenjem ivica žleba (Y - žleb). Na taj način bi se dobilo i nešto manje nadvišenje lica šava.

Prema literaturi [7], pri ispitivanju epruveta sa spojem u celini, ugao savijanja manji od 180^{o} nije prihvatljiv. Pri ispitivanju spojeva zavarenih DM veće čvrstoće od čvrstoće OM deo epruvete između oslonaca, slika 5.a), se ravnomerno deformiše. Međutim, u slučajevima kada DM ima čvrstoću koja je niža ili je približno jednaka čvrstoći OM, deformacija dela epruvete između oslonaca je neravnomerna i uglavnom je skoncentrisana u MŠ, slika 6.a). U tom slučaju MŠ ima veliki stepen deformacije pri malom uglu savijanja epruvete, što dovodi do pojave prslina u spoju, slika 6.c). U ovom slučaju ravnomernu deformacije mernog dela epruvete moguće je ostvariti savijanjem valjkom oko trna, slika 5.b). U tom slučaju je stepen deformacije MŠ, pri uglu savijanja epruvete od 180^{o} znatno manji, slika 6.b) pa se prsline u MŠ ne pojavljuju, slika 6.d). U slučajevima kada se savijanjem ispituju spojevi zavareni DM niže čvrstoće od čvrstoće OM ispitivanje treba izvesti savijanjem valjkom oko trna. Rezultati merenja tvrdoća pokazuju da je u ZUT došlo do pada tvrdoća u odnosu na tvrdoću OM. Sa slike 1. se vidi da OM ima strukturu otpuštenog martenzita. Ova struktura je dobijena kaljenjem i otpuštanjem čelika. U literaturi nisu pronađeni podaci o visini temperature otpuštanja čelika HARDOX 400.

Međutim, na osnovu preporuke o maksimalnoj međuprolaznoj temperaturi [6] od 225^{o}C, može se zaključiti da je temperatura otpuštanja čelika bila niska, verovatno oko 250 do 300^{o}C. Zagrevanje OM iznad ovih temperatura vodi nastavku procesa otpuštanja, zbog čega tvrdoća OM opada. Tokom zavarivanja temperatura OM duž spoja raste zbog zagrevanja toplotom električnog luka. Da bi se sprečio pad tvrdoće u ZUT, tokom zavarivanja se mora voditi računa da temperatura OM ne prelazi 225^{o}C.

Uvođenjem predgrevanja OM skraćuju se deonice spoja na kojima se u ZUT dostiže temperatura 225^{o}C, proširuje se ZUT i time i zona u kojoj opada tvrdoća. Zbog toga predgrevanje čelika HARDOX 400 manjih debljina nije poželjno. Međutim, u ovom

(40-50%), a significant increase in the carbon content of the WM is expected, leading to an increase in its strength. In addition, the stress corresponding to plastic strain of 0.2% in the WM is significantly higher than the additional material yield stress (tables 4 and 6). Stress magnitudes corresponding to permanent plastic strain in the WM should be accepted at a conditional level, since the measured part of the specimen is made of materials with different properties (PM, HAZ and WM). However, this information, as well as strain distribution along the measured part of the specimen, figure 4, provide insight into the development of strain in the welded joint. The increase in stress levels at which plastic strain of the WM initiates affects the increase of residual stresses in the weld, which results in increased risk of cold crack initiation. Residual stresses in this cases can be reduced by reducing the level of mixing between PM and additional material, increasing the gap in the groove and partial slanting of groove edges (Y – groove). This would also result in a slightly smaller weld face overhang.

According to literature [7], during the testing of specimens as a whole, bending angles less than 180° are not acceptable. During the testing of welded joints in which the additional material is stronger than the PM, the part of the specimen between the supports deforms uniformly (figure 5a.). However, in the case that the strength of the additional material is equal to or below the strength of the PM, the strain between the supports is non-uniform and mostly concentrated in the WM, figure 6.a). In this case, the WM deforms significantly at small bending angles, which leads to cracks occurring in the weld, figure 6.c), In this case, uniform strain distribution of the measured part of the specimen is possible to achieve by bending around the mandrel using rollers, figure 5.b). In this case, the strain level of the WM, for the bending angle of 180°, is significantly lower 6.b), thus the cracks do not occur in the WM, figure 6.d). In the case where bending is used to test welded joints with additional material whose strength is lower than that of the PM, testing should be performed by bending around the mandrel using a roller. Hardness measuring results indicated that there was a drop in hardness in the HAZ compared to the PM. It can be seen from figure 1 that the PM has a tempered martensite structure. Such structure is obtained by quenching and tempering of steel. Information about the temperature used for HARDOX 400 steel tempering were not found in the literature.

slučaju je, pred zavarivanje, potrebno sušenje ivica žleba i njihove okoline naročito ako je ambijentalna vlažnost veća od 40%. Ovo sušenje treba izvoditi plamenom kiseonika i acetilena i ima za cilj uklanjanje vlage adsorbovane na površini metala čime se smanjuje verovatnoća nastanka hladnih prslina.

Međutim, predgrevanje ima pozitivan uticaj na smanjenje zaostalih napona u spoju i time i na smanjenje njegove sklonosti ka pojavi hladnih prslina. Zbog toga se zaostali naponi moraju smanjiti preduzimanjem drugih mera npr. zavarivanjem povratnim korakom i ograničavanjem širine žleba. U ovom slučaju, dužina povratnog koraka ne treba da bude veća od dužine spoja na kojoj se, u datim uslovima (količina unete toplote, debljina čelika), u ZUT postiže temperatura od 225^{o}C. Povećanje dužine koraka vodi smanjenu tvrdoće u ZUT, a smanjenje dužine koraka nepotrebno povećava broj mesta početaka i završetaka zavara što povećava verovatnoću pojave grešaka u spoju.

Optimlni zazor u žlebu je 3 mm. Manji zazor onemogućava pouzdano provarivanje, a veći zazor povećava širinu MŠ. Naponi koji nastaju usled poprečnog skupljanja MŠ su utoliko veći ukoliko je širina žleba veća, pa verovatnoća nastanka prslina raste sa porastom širine žleba.

4. ZAKLJUČCI

Zbog martenzitne mikrostrukture čelik HARDOX 400 ima sklonost ka pojavi hladnih prslina u zavarenim spojevima. Da bi se one izbegle treba koristiti dodatne materijale niže čvrstoće od čvrstoće samog čelika, čime se smanju zaostali naponi u spojevima i time i njihova sklonost ka pojavi hladnih prslina. Pri ispitivanju savijanjem oslanjanjem u tri tačke, epruvete sa spojevima zavarenim dodatnim materijalima niže čvrstoće u odnosu na čvrstoću čelika HARDOX 400 se neravnomerno deformišu.

Pri ispitivanju savijanjem oslanjanjem u tri tačke, epruvete sa spojevima zavarenim dodatnim materijalima niže čvrstoće u odnosu na čvrstoću čelika HARDOX 400 se neravnomerno deformišu.

Zbog toga nije moguće postići potreban ugao savijanja bez pojave prslina. Ravnomernu deformaciju mernog dela epruvete i potreban ugao savijanja je, u ovim slučajevima, moguće postići savijanjem valjkom oko trna.

Pri zavarivanju čelika HARDOX 400 dolazi do strukturnih promena u zoni uticaja toplote koje su praćene padom tvrdoće. Zbog toga su količina unete toplote i maksimalna temperatura do koje se sme zagrevati osnovni materijal ograničeni.

However, based on the recommendation for maximum interpass temperature [6] of 225°C, it can be concluded that the steel tempering temperature was low, probably around 250 to 300°C. Heating of the PM above these temperatures allows the tempering process to continue, thus reducing the WM hardness. During the welding, the temperature of the PM along the welded joint increases due to the heat generated by the electric arc. In order to prevent the hardness drop in the HAZ, it should be ensured that the temperature in the PM does not exceed 225°C during the welding process. Preheating of the PM reduces the size of welded joint sections within the HAZ wherein the temperature reaches 225°C, expands the HAZ, which also increases the zone in which the hardness decreases. Due to this, preheating of thin HARDOX 400 steels is not recommended. However, in this case, it was necessary to dry the groove edges and their surrounding area prior to welding, especially if the ambiental humidity is above 40%. This drying should be performed using oxygen and acetylene flame, and its purpose is to remove humidity adsorbed by the metal surface, which reduces the probability of cold crack initiation. However, preheating positively affects the reduction of residual stress in the welded joint, which results in decreased vulnerability to cold crack initiation. Hence, residual stresses must be reduced by other means, such as reverse step welding and groove edge limiting. In this case, the reverse step length should not be greater than the welded joint length wherein, under given condition (amount of heat input, steel thickness), the temperature in the HAZ reaches 225°C. Increase in step length leads to reduced HAZ hardness, and reducing this length leads to an unnecessary increase in the number of start and end locations in the welded joint, which in turn increases the probability of defects occurring in the weld. Optimal gap in the groove should be 3 mm. Smaller gaps disable reliable penetration, whereas larger ones increase the WM width. Stresses that occur due to lateral WM contraction increase with groove width, hence the probability of crack initiation increases as well.

4. CONCLUSIONS

Due to its martensitic micro-structure, HARDOX 400 steel has a tendency toward cold crack initiation in welded joints. In order to avoid them, additional materials whose strength is lower than the steel itself should be used, since this reduces the residual stresses in the weld, thus decreasing the risk of cold cracks.

U tehnologijama zavarivanja, najčešće se definiše minimalna međuprolazna temperatura koja treba da obezbedi dovoljno sporo hlađenje da se, u zoni uticaja toplote, spreči obrazovanje tvrdih i krtih struktura. Međutim, u slučaju čelika HARDOX 400 definisana je maksimalna međuprolazna temperatura čije preleženje izaziva pad tvrdoće i otpornosti na habanje. Zbog toga je pri zavarivanju ovog čelika nepohodna stalna kontrola temperature duž spoja.

Predgrevanje čelika HARDOX 400 do debljina od 20 mm nije potrebno. Zagrevanje čelika navedenih debljina, pre zavarivanja se u ovom slučaju odnosi isključivo na uklanjanje adsorbovana vlaga, čime se smanjuje sadržaj vodonika u metalu šava i njegova osetljivost na pojavu hladnih prslina.

Pri zavarivanju čelika HARDOX 400 treba preduzeti sve raspoložive mere za smanjenje zaostalih napona, kao što su npr. zavarivanje povratnim korakom, optimalni zazor u žlebu i izbegavanje zavarivanja ukrućenih spojeva.

During the three point bending tests, the specimens with welded joints whose additional materials had lower strength than the HARDOX 400 steel, these specimens deformed non-uniformly. Thus, it was impossible to achieve the necessary bending angle without crack initiation. Uniform strain distribution of the measured part of the specimen, as well as the required bending angle can be achieved, in this case, by bending around the mandrel using a roller.

During the welding of HARDOX 400, micro-structural changes in the HAZ occur and result in a drop in hardness. Due to this, the amount of heat input and maximum heating temperature of the parent material are limited. In welding technologies, it is common practice to define the minimum interpass temperature that should ensure sufficiently slow cooling, in order to avoid the forming of hard and brittle structures in the HAZ. However, in the case of HARDOX 400 steel, maximum interpass temperature was defined instead, since exceeding this temperature would lead to a drop in hardness and, consequently, wear resistance. Because of the above, constant control of temperature along the welded joint is necessary during the welding of this steel.

Preheating of HARDOX 400 steel with thickness up to 20 mm is not necessary. Heating of such steels prior to welding is, in this case, related entirely to the removal of adsorbed humidity, which reduces the hydrogen content in the weld metal, thus reducing its vulnerability to cold crack initiation.

During the welding of HARDOX 400 steels, all available means of residual stress reduction should be utilized, including, e.g. reverse step welding, optima groove gaps and avoiding of welding of fixed joints.

LITERATURA

[1] Welding of Hardox, SSAB, Oxelősund AB, Sweden, 2014.

[2] Inspection certificate No 79198K, HARDOX 400, SSAB Europe Oy, 2016.

[3] S. Sedmak: Uputstvo za ocenu prihvatljivosti grešaka u zavarenim konstrukcijama PD 6493, Seminar za specijaliste za posude pod pritiskom, Tehnološko metalurški fakultet u Beogradu, Beograd, 1996.

[4] R. Jovičić, M. M. Algool, U. Tatić, O. Popović, U. Lukić, M. Burzić: Storage Tank Integrity Assessment after the Removal of Weld Cracks, časopis Structural Integrity and Life, Vol 14, No 1 (2014), str. 35-38, ISSN/ISBN 1451-3749, COBIS SR-ID 181616135

[5] Bohler Welding Handbook, Voestalpine Böhler Welding Austria GmbH Böhler, Kapfenberg, Austria, 2014.

[6] Welding Weldox and Hardox, SSAB, Oxelősund AB, Sweden, 2007.

[7] SRPS EN ISO 15614 – 1/2017: Specifikacija i kvalifikacija tehnologije zavarivanja metalnih materijala – Kvalifikacija tehnologije zavarivanja – Deo 1: Elektrolučno i gasno zavarivanje čelika i elektrolučno zavarivanje nikla i legura nika

[8] SRPS EN ISO 5817/2015: Zavarivanje – Zavareni spojevi topljenjem na čeliku, niklu, titanu i njihovim legurama – Nivoi kvaliteta nepravilnosti

[9] SRPS EN ISO 5173/2013: Ispitivanje sa razaranjem zavarenih spojeva metalnih materijala — Ispitivanje savijanjem