Građevinski materijali i konstrukcije
Building Materials and Structures
journal homepage: www.buildingmaterialsstructures.com

https://doi.org/10.5937/GRMK2600017C

Review paper

Demountable connections for structural concrete reusability - State of the art and future directions for reinforced concrete, Part I: slabs

Carević Jelena[*1)], Milićević Ivan[1)], Vidović Milica[1)]

[1)] *University of Belgrade, Faculty of Civil Engineering, Bulevar kralja Aleksandra 73, 11000 Belgrade, Serbia*

Article history

Received: 19 May 2026
Received in revised form: 27 May 2026
Accepted: 29 May 2026
Available online: 12 June 2026

Keywords

precast concrete structures,
dry and semi-dry joints,
demountable connections,
slab-to-slab connections,
slab-to-beam connections,
reusability

ABSTRACT

This paper reviews demountable concrete slab connections as a strategy for reusing precast and existing reinforced concrete elements, with a focus on dry and semi-dry joints that enable assembly and disassembly. It analyses slab-to-slab and slab-to-beam connections, comparing solutions that differ in complexity, level of development and validation, and steel usage. Connections are analysed for two groups: precast slabs and monolithic concrete slabs cut for future reuse. Most proposed solutions are bolted dry connections, typically at a conceptual stage, with limited experimental validation. While some demountable precast joints can achieve performance close to that of monolithic systems, experimental results generally show reduced stiffness and load-bearing capacity. Reuse performance also tends to decline slightly in subsequent life cycles, highlighting the need for validation beyond initial use. Key factors such as slab rigidity significantly influence structural behaviour but remain insufficiently studied. Overall, wider practical application requires more comprehensive experimental and numerical research, especially beyond the first life cycle and system-level performance, along with integration into design standards.

1 Introduction

In contemporary growth-driven, globalised economies, the relentless pursuit of increased production has distanced the construction industry from many sound engineering principles and practices. Traditionally, structures were designed efficiently, using local materials, with proper maintenance, adaptation and reuse of components beyond their initial service life, and with minimised waste generation. However, industrialisation shifted priorities towards cost reduction and maximisation of profit. Consequently, we now face significant environmental challenges, and current scientific and societal efforts seek both to revive neglected principles and to develop new strategies to halt further degradation. Today, the construction industry is rigorously analysing products, processes, and frameworks to reduce environmental impacts. In the post-war era of rapid industrialisation, the concrete industry emerged as a leader, with concrete becoming the second most widely used material in the world after water. This leading position, however, brings a substantial environmental burden. The industry's consumption of natural resources—such as river and crushed stone, cement clinker, and water—the CO_2 emissions produced during cement and concrete manufacture and transport, and the vast amounts of waste generated all place the concrete sector at the forefront of environmental concerns in construction [1].

A wide range of strategies has been proposed to reduce the environmental impact of the concrete industry [2]. In the hierarchy of carbon-reduction strategies, the most effective option is to avoid building new structures by repurposing and refurbishing existing ones and by designing flexible, adaptable buildings. Where this is not possible, new construction should be limited to meeting genuine community needs while maximising the utilisation of buildings and materials [3]. When a building must be dismantled, the preferred approach is careful deconstruction and reuse of its elements, which implies that buildings should be designed for deconstruction and reuse [4]. Finally, waste should be reduced through upcycling, recycling or downcycling of materials. Across all these strategies, reuse is placed at the top of the hierarchy as a key element of the circular economy, which explains the recent surge of interest in the reuse of concrete structural elements. Reuse involves carefully disassembling components from an obsolete "donor" structure and reassembling them in a new "receiving" structure. By prolonging the service life of these components in their original or a comparable function, reuse reduces waste generation, greenhouse gas emissions and the demand for new raw materials [5].

Despite this potential, the implementation of reusable concrete elements in practice remains limited due to market, regulatory and technical barriers. The existing building stock has largely been designed for predominantly monolithic

[*] Corresponding author:
E-mail address: jelenad@imk.grf.bg.ac.rs

behaviour, with wet, cast-in-place joints, which hinder selective deconstruction and the recovery of undamaged elements at end-of-life. There is no systematic information on the building stock, the types and quantities of possible elements for reuse or the expected dates of availability of those elements [6]. This problem has been recognised by the research community, and several projects are focusing on building such databases [7]. Furthermore, incomplete information on material properties, reinforcement layout, prior loading history and degradation impedes reliable assessment of residual capacity and complicates compliance with current design standards. At the same time, the lack of standardised demountable connection systems and clear business models has constrained the development of a mature market for reclaimed precast components [8].

In response, recent research has focused on demountable and dry connections as key enablers for the reuse of precast concrete elements. Semi-dry systems, such as grouted-dowel or hybrid steel–concrete joints, represent an intermediate step towards circularity; however, the highest level of reusability is achieved with totally dry connections, where precast elements are joined exclusively by mechanical steel devices without any cast-in-place concrete [9]. Dry connections between slabs, beams and columns that allow easy demountability and reusability while providing adequate strength and stiffness are particularly challenging in reinforced concrete structures. The key problems are the greater deformability of dry connections compared to monolithic joints and the behaviour of dry joints in the second life cycle of structures, especially under seismic loading. To remain viable over multiple life cycles, buildings with reusable precast elements must maintain structural safety and serviceability throughout, including adequate durability and fire resistance.

The objective of this study is to provide a critical review of demountable connections—dry, or semi-dry where easily reversible—between concrete elements: (1) slab segments, and slabs and beams, (2) beams and columns and (3) columns and foundations. The connections and joints are analysed from the perspectives of ease of disassembly, reuse potential, behaviour in the first and second life cycles, and strength and deformability. The analysis and results are presented in two companion papers: “Demountable connections for structural concrete reusability – State of the art and future directions for reinforced concrete. Part I: slabs” and “Part II: precast frames”.

This paper is structured as follows. Section 2 discusses the role of reusable slabs as diaphragms. Section 3 reviews demountable slab-to-slab and slab-to-beam connections for new precast slabs and cut monolithic slabs. Section 4 provides a critical discussion and Section 5 summarises the main conclusions and research needs.

2 The role of the concrete slab as a rigid diaphragm

Slabs are primary horizontal load-bearing elements in buildings, transmitting gravity loads to vertical members and acting as diaphragms that tie the structure together and transfer horizontal forces to lateral load-bearing elements (walls and frames) [10]. Reinforced concrete slabs are most commonly cast in-situ as monolithic elements, but when construction speed or industrialisation is a priority, they are often designed as precast units. In precast construction, slabs are typically geometrically optimised to reduce self-weight, with hollow-core slabs (HCS) and double-T slabs being the most widely used solutions. Both slab types are usually designed with cast-in-place toppings to maintain continuity and cannot be easily reused due to the wet connection.

When slabs are designed for reuse, the usual approach is to use simply supported slab segments with dry connections along their longitudinal edges to form a rigid diaphragm. These connections should be designed to resist slip, work together to transmit gravity loads, and provide adequate resistance to vertical shear. The typical approach to concrete slab design assumes a uniform distribution of loads across slab spans for global analysis. This assumption needs to be confirmed for reused precast slabs, or the load analysis should be performed in more detail, with accurate linear or concentrated load distributions in the slabs, accounting for slab widths. However, this would reduce the potential for structural adaptability and limit possible changes in load position on slabs during the second life cycle or after adaptation; for example, the position of partition walls could not be chosen freely. Continuous slabs over beams are not a common choice for reused slabs, as continuity would require strengthening or grouting in the top zone, making disassembly at the end of the life cycle more difficult. The reuse of slabs limits the future structures’ span flexibility, so the idea of connecting slab segments in the longitudinal direction to extend the span is also introduced in some studies. These longitudinal in-span connections should be designed to transfer bending and shear forces, provide a rigid connection, and maintain slab continuity. Another important aspect in the design of reused slabs is the dry slab-to-beam or wall connection. This connection should enable the transfer of horizontal and vertical loads to beams/walls, and, if needed, flexural actions.

Longitudinal edge connections between slab segments should also resist shear forces induced by horizontal loads (wind and seismic action), enabling the uniform distribution of horizontal loads across all main horizontal load-bearing elements. The problem of diaphragm rigidity when designing reusable slabs is similar to the analysis done for untopped precast concrete slabs.

The diaphragm behaviour of reusable precast slabs is closely related to that of conventional untopped precast slabs [11]–[15]. Untopped slabs are typically connected on site by discrete steel connectors placed along the slab joints, without a cast-in-place topping, and their in-plane stiffness is therefore generally lower than that of monolithic floor systems. Studies on untopped precast slabs have shown that it is unsafe to assume rigid diaphragm behaviour a priori without experimental or numerical validation [15], since limited in-plane stiffness may lead to larger diaphragm deformations. Good anchorage of the connectors is essential, and in seismic design the diaphragm should remain elastic; therefore, the strength and stiffness [12] of untopped slab systems without topping need to be verified by testing. These findings are directly relevant to reusable slab systems, as most proposed demountable slab connections also rely on discrete mechanical connectors to transfer in-plane forces and develop diaphragm action. Therefore, reusable slabs should not be assumed to act as rigid diaphragms unless such behaviour is demonstrated through appropriate validation of the connection system.

The rigidity of floor slabs is especially important for the seismic design. Different standards define different limitations and consideration for the use of untopped precast slabs in different seismic zones. In the American standards for seismic design, the untopped precast slabs are not permitted in high seismic zones without appropriate experimental validation and consideration of slab rigidity and

ONLINE PAPER

connection ductility [16]–[18]. In the European standards, no specific limitation for untopped precast slabs is stated, but a minimum topping of 70 mm is required for adequate seismic design, limiting the use of these slab solutions in moderate or high seismic zones [19]. It is clear that the rigidity of precast slabs designed for reuse is of the most importance, and that it cannot be assumed as a rigid diaphragm without the adequate analysis of connection testing. The analysis should compare the horizontal movement of slabs or their relative movement to the monolithic slab, or be based on appropriate experimental testing. The EN 1998-1-1 standard [19], for example, declares a slab as a rigid diaphragm if the seismic induced lateral movement is less than 10% higher compared to the case when the slab is assumed as an absolute rigid diaphragm.

These observations underline that the diaphragm behaviour of reusable precast slabs is governed to a large extent by the stiffness and detailing of their connections, and that reliable diaphragm action cannot be ensured without explicit validation of the connection system. In addition to diaphragm action, these requirements emphasise that connection detailing governs vertical and longitudinal force transfer, as well as the practical reusability of slab systems, which motivates the following review of demountable slab connections.

3 Demountable connections that could enable the reuse of slabs

The review above shows that connection behaviour is critical for both the structural performance and the reusability of precast concrete slabs. When designed for reuse, slabs should therefore be conceived as precast segments with in-built connections that allow not only straightforward disassembly, but, more importantly, repeated reassembly in new configurations. Reusability also implies that transport and handling of slab segments should require no fundamental changes to current construction practice. In practical terms, this calls for segmented precast slabs with connections designed to ensure adequate interaction between elements and sufficient stiffness and strength in service. Wherever possible, these connections should be dry, or only partially wet in a way that enables easy demountability without damaging the embedded connection components. While some mechanical parts, such as bolts, washers and nuts, may be replaced in subsequent life cycles, it is crucial that the embedded connection elements retain their integrity during disassembly and reassembly.

Slabs are structural elements with strong potential for reuse, as they account for the vast majority of concrete volume in reinforced concrete buildings. Consequently, current research on slab reuse addresses both the development of precast slabs with reusable connections and the design of connections for cast-in-situ slab segments cut from obsolete structures. Both types of connections should fulfil the same structural functions, although their installation procedures and force-transfer mechanisms differ. Section 3.1 reviews demountable connections for new precast slabs, while Section 3.2 focuses on connections developed for monolithic slabs cut from existing structures.

3.1 Precast concrete slab connections

The idea of designing concrete structures for reusability is not new. One of the earliest demountable structural concepts was introduced in the 1970s and further developed in Europe [5], [20]. Several reusable structural systems were developed in the Netherlands in the 1990s: *Matrixbouw system, CD20 system, SMT system, Bestcon-30 system and Moducon-2000* [21]. These systems are largely closed, meaning that only elements from the same system can be connected to each other. They are similar to conventional concrete flat-slab buildings, typically comprising columns, slabs and walls. The slab segments are directly connected to the column heads and feet via bolts that protrude from the column and pass through pre-drilled holes in the slabs (Figure 1). The slabs used in these systems were ribbed (*Matrixbouw system*), pre-stressed (*CD20 system*) or double T (*SMT system*). No experimental data are available on the behaviour of these systems, and in some cases the connections were grouted (*SMT* and *Bestcon-30 systems*). The main barriers to broader implementation of these systems for reusable concrete structures are: the lack of technical information on behaviour under seismic loading, the lack of design guidelines for these connections and restrictions regarding modularity and custom-made buildings [22][23].

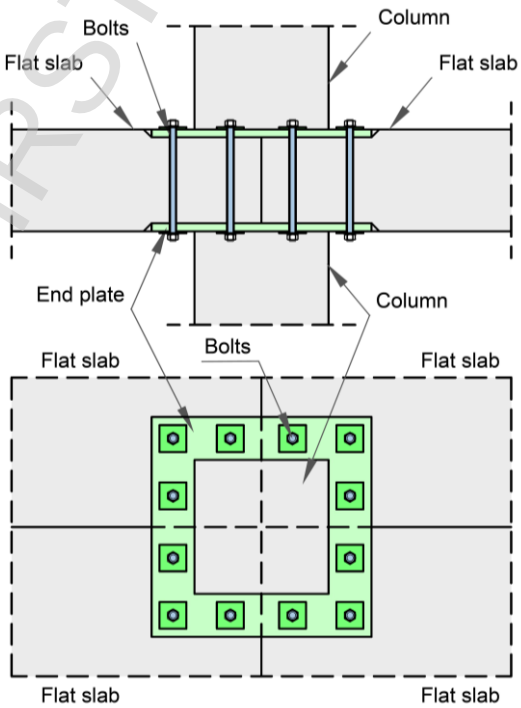

Figure 1. The Matrixbouw system column and flat slab connection - adapted from [21], [22]

Only a handful of new slab-to-slab connections are reported in the literature. They are mostly inspired by composite slab solutions and are designed with mechanical connectors and additional steel elements, such as plates, angles, or shear keys. These connections are either between adjacent slab segments in longitudinal direction, or in the middle of slab spans (mid-section connections).

A conceptual design of slab-to-slab longitudinal connection is presented in [23]–[25], and an adaptation of that connection is shown in Figure 2. Slab segments are longitudinally connected using steel plates and threaded rods. Holes are drilled in precast slabs, and they are connected using steel plates and threaded bars or bolts. Longitudinal shear forces between slabs are transferred through the dowel action of the bolts. Bolts can be pre-tensioned, and in that case, the shear forces are also

ONLINE FIRST

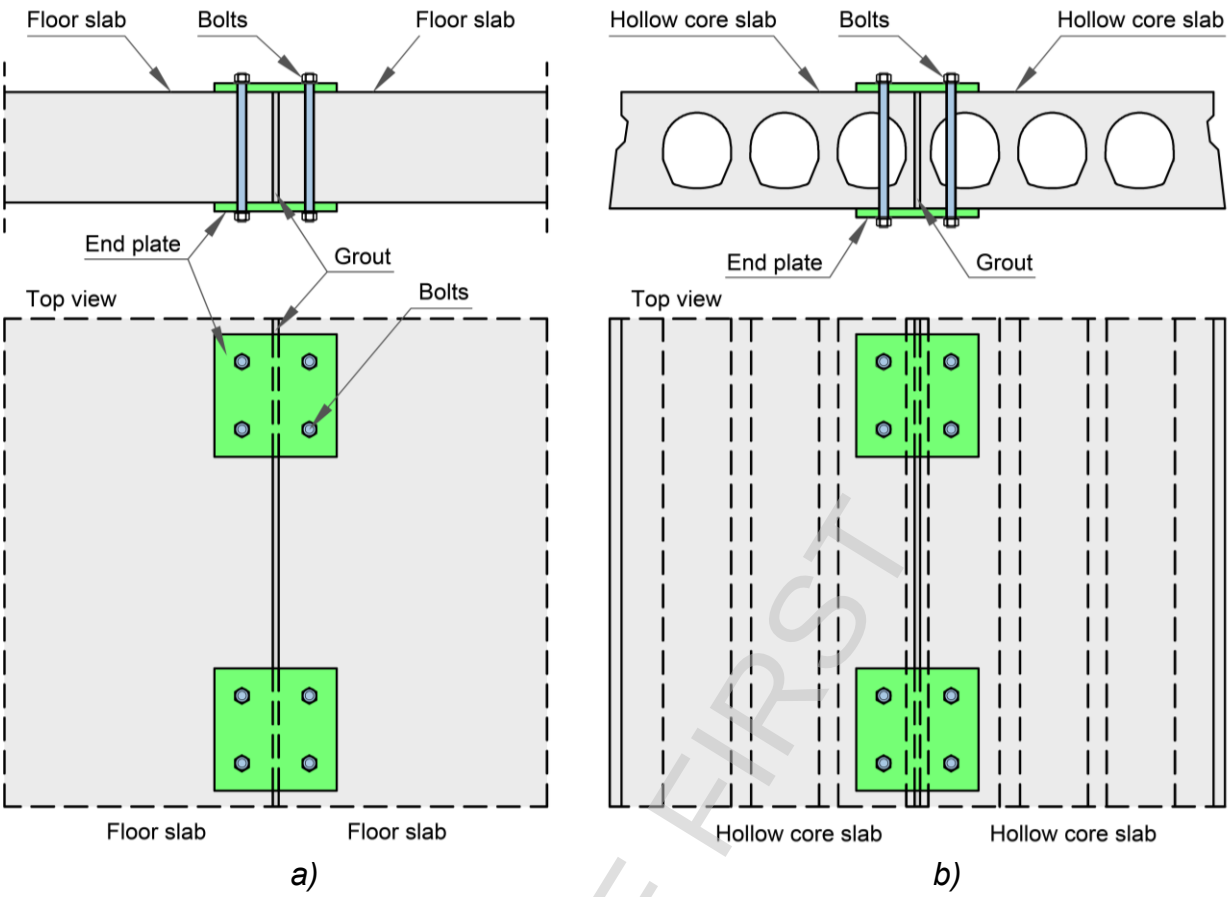

Figure 2. Layout of conceptual design of removable slab-to-slab connections: a) solid reinforced concrete slab segments, b) HCS segments - adapted from [23]–[25]

resisted by the friction between steel plates and slabs [26]. This connection type can generally be applied to flat slabs, double T and hollow-core slabs with minor modifications. However, no details about the geometry of connecting elements are presented, no analysis or experiments regarding the behaviour of the connection were conducted, so this solution is still at the conceptual level.

The same authors suggested one more possible solution for longitudinal connections between slab segments, but it remained on the conceptual level as well (Figure 3) [23], [24]. The slab segments have saw-tooth edges, with adjacent slab units interconnected by embedding the protruding ends of one floor slab unit into the recessed ends of the second slab unit. This connection type, if properly designed, can resist horizontal shear forces, but without any mechanical connectors, it cannot provide adequate resistance for vertical shear forces.

Another slab-to-slab connection was proposed by a different group of authors, but the connection type they proposed and tested was a mid-span connection between slab elements [26]. They proposed four different connection configurations in the slabs mid-span: simple bolted connection (Figure 4 a)), bolted connection with an embedded steel block (Figure 4 b)), bolted connection with a shear key (Figure 4 c)), and bolted connection with a combination of shear key and embedded steel block (Figure 4 d)).

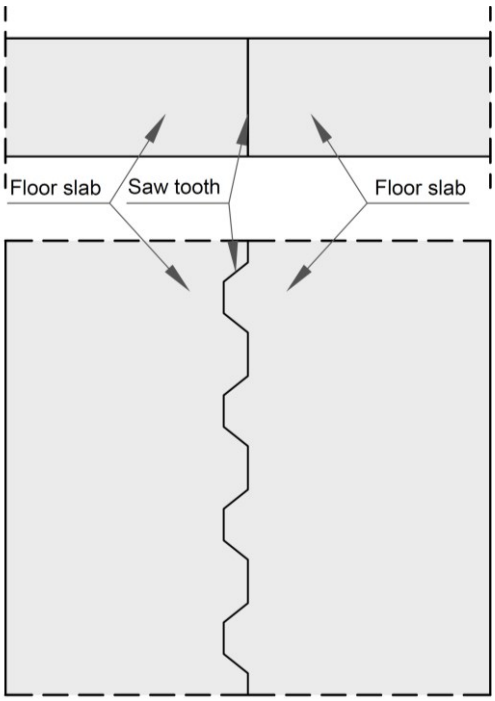

Figure 3. Layout of conceptual design of removable slab-to-slab connections with saw-tooth edges - adapted from [23], [24]

ONLINE FIRST

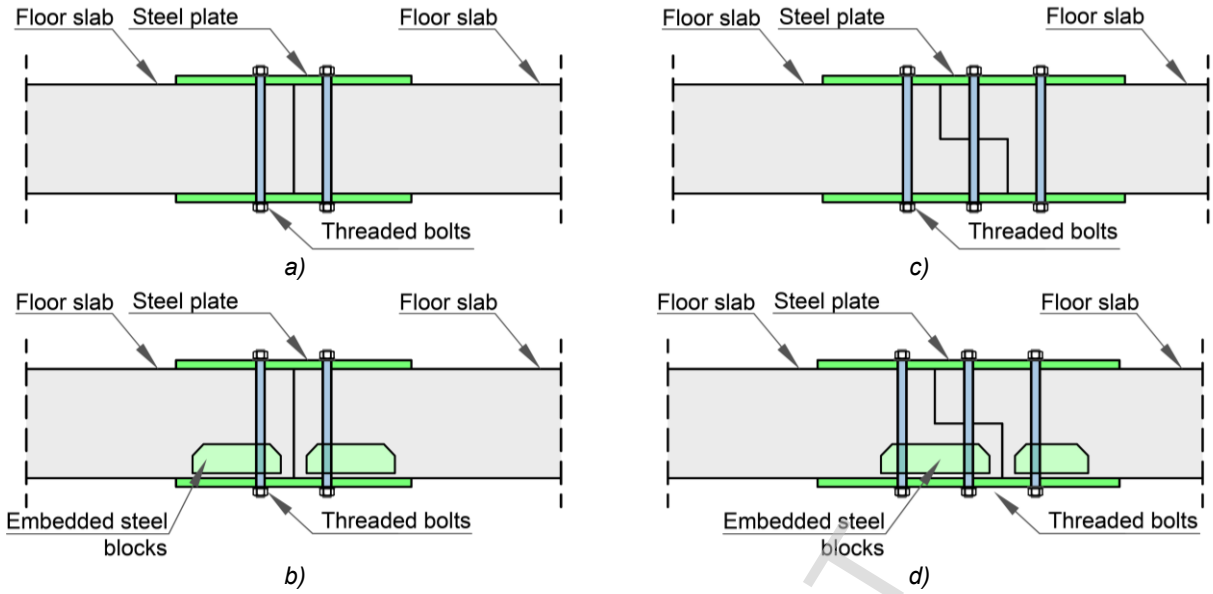

Figure 4. Slab-to-slab mid-span connections: a) simple bolted connection, b) bolted connection with an embedded steel block, c) bolted connection with a shear key, and d) bolted connection with a combination of shear key and embedded steel block - adapted from [26], [27]

The first slab-to-slab connection type they proposed was a mid-span connection with steel plates at the top and bottom of the slab ends, and high-tensile threaded steel bolts. Holes for bolts were protected with steel ducts to prevent the bolts from moving (Figure 4 a)). The second type (Figure 4 b)) was a modification of the previous connection type with an additional steel block with ribs welded to the tensioned slab reinforcement.

The other two connection types were similar to the first two, but with a shear-key. The third connection consisted of shear keys at both ends of slab segments, which were interlocked and connected with high-tensile threaded steel bolts protruding through the full slab depth (Figure 4 c)). And the last connection was a combination of previous types with shear keys strengthened with steel blocks with ribs and threaded bolts (Figure 4 d)).

The authors conducted experimental testing of slabs with these four connection types, and compared them to a reference slab without a mid-span connection. Simple supported 5.2 m one-way slabs (50 cm wide and 16 cm deep) were tested in a four-point bending test. All specimens had 50 cm-wide, 8 mm-thick connecting steel plates. To be efficient, this connection should ensure slab continuity by providing the required bending and shear strengths. Experimental tests showed that all four demountable slab solutions exhibited lower ultimate loads, higher crack widths, and higher deflections than the reference monolithic slab. For slabs with embedded steel blocks, the reduction of strength was highest – around 60%, and for the simple shear key solution, the lowest – around 25% [26]. Embedded steel blocks induced stress concentrations, large crack widths and low bearing capacity. The solution with shear keys and threaded bolts yielded the best results, but more research and modification are needed to validate this type of in-span connection. It is still unclear how to design these connections, how to reinforce the area around the connection, and what is the influence of this connection on global slab behaviour regarding the diaphragm effect and vibrations. Ensuring adequate continuity in slabs (mid-span or other in-span sections) cannot be easily achieved without significant additional steel for connections. In current practice, the design of reused slabs generally does not include in-span connections; instead, simply supported slabs are used, with secondary steel beams if the spans are shorter than desired. This is also a solution with additional steel, but the load transfer is straightforward and uses easy, validated connections.

Connections with interlocking steel elements, mostly plates of different shapes, have been studied as a replacement for traditional welding or bolting. One study focused on the development of demountable interlocking slab-to-slab connections [28]. The connection consisted of two parts: (1) an embedded high-strength steel faceplate with the T-shaped and rectangular-shaped cuts, and (2) H-shaped or rectangular-shaped connectors for in-plane and out-of-plain shear (Figure 5). No detail about the faceplate anchorage was provided in this study. The teeth and connectors interlock, and their shape and number should be defined based on the design shear forces. Steel elements were designed with a 2-mm installation tolerance. A monotonic tension test was conducted to evaluate the in-plane interaction behaviour between shear connectors and embedded steel plates. Steel strength, number of connectors, spacing between cuts, faceplate tooth width and connector shape were varied during the experimental testing. The results showed that this system can provide an in-plane shear transfer. However, these connections were not tested within a concrete slab; anchoring is neither designed nor analysed; the effects of edge distance and reinforcement detail are unknown; and the behaviour of this connection type under seismic loading is not tested.

ONLINE FIRST

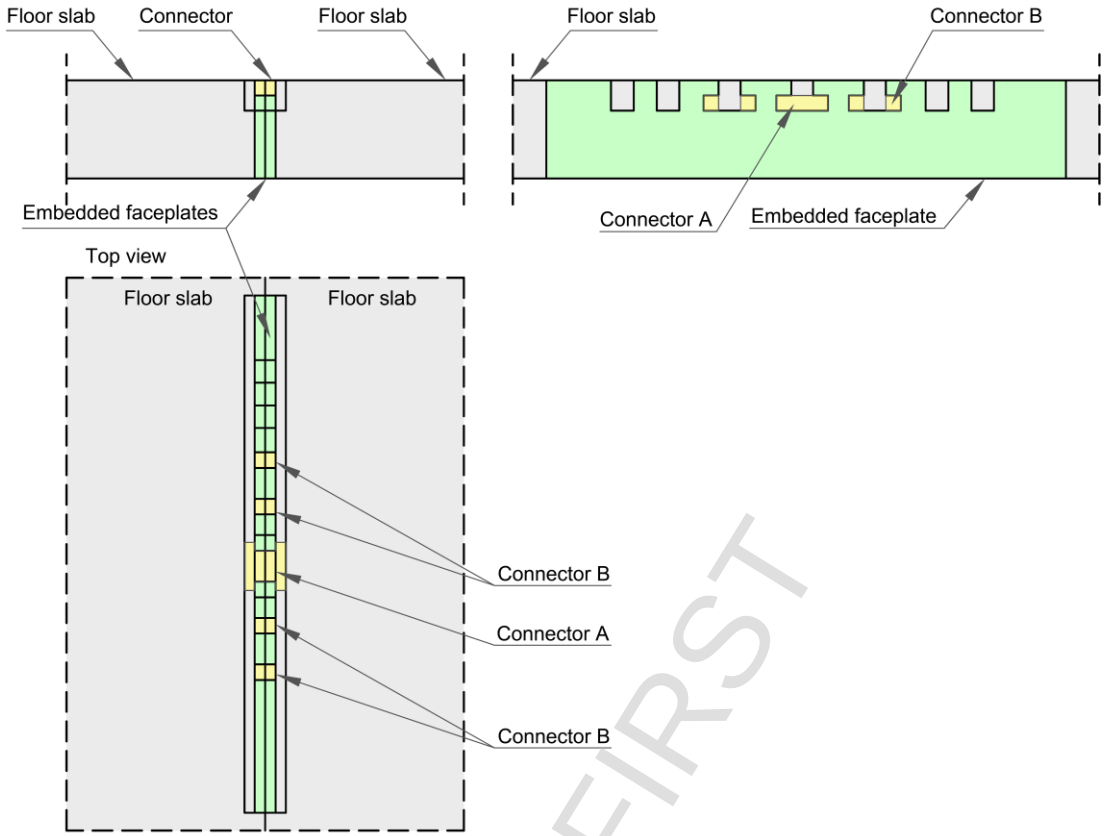

Figure 5. Demountable interlocking connection - adapted from [28]

Another important connection is the slab-to-beam or slab-to-wall connection. These connections should be designed to prevent slip and enable effective flexural and shear transfer. Similar to slab-to-slab connections, connections between slabs and beams are designed using bolts, steel plates, or angles. A few examples found in literature for this type of connection are described below.

One preliminary design idea for demountable slab-to-beam connections is shown in Figure 6. [23]–[25]. Precast concrete slabs are connected with beams using bolts that protrude from the slab through drilled holes, and are embedded for some length in the beam (Figure 6 a)). Two slab segments are also connected with steel plates and bolts on the top side under the beams. The general concept of this connection is that bolts connected to the floor slab are removable, and the bolts connected to the beam are embedded into the concrete (Figure 6 b)). The holes in the steel angles on the beam side are slotted vertically to accommodate relative vertical movement between the beams and slabs under lateral loads. A similar type of floor-to-beam steel connection system is possible for different types of floor slabs (Figure 6 c)). This type of connection can be easily disassembled if the slab is constructed without the topping. If an adequate number of bolts on adequate spacing are selected, this connection can transfer vertical and horizontal shear between the slab and the beam. There are no specific details about this connection in [23]–[25], so it is unclear what the adopted tolerances are,

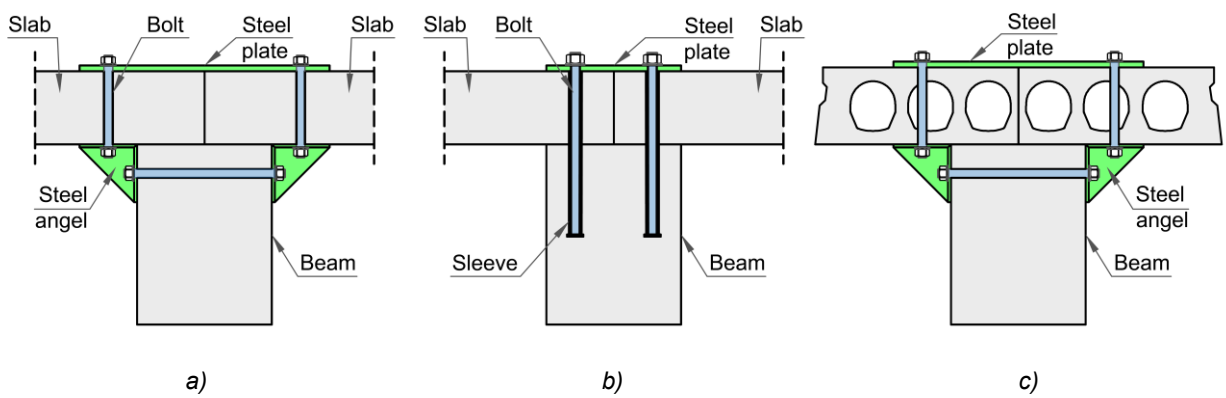

Figure 6. a) Solid slab-to-beam connection with bolts and steel plates and angles, b) solid slab-to-beam connection with bolts and steel plates and c) Hollow-core slab-to-beam connection with bolts and steel plates - adapted from [23]–[25]

ONLINE FIRST

how they will affect the connection flexibility, or whether this is a longitudinal or transverse connection of slabs to the beam (especially the connection presented in Figure 6 c). Also, there are no experimental or numerical test results for these connections in the present literature, so no clear conclusions about their behaviour and the slab as a whole can be drawn.

In some research studies, an attempt was made to minimise the connections between slab segments in the longitudinal direction by designing larger slab segments that cover the whole grid field [23] [29] [30]. One example of that slab solution is shown in Figure 7 a), together with the concept of bolted connections in the middle (Figure 7 b)) and edge beams (Figure 7 c)). One of those slab-to-beam connection types was demonstrated by Zhang et al. [31] in a ½ scaled three-story demountable precast concrete frame structure, designed for a peak ground acceleration of 0.2g, and tested on a shaking table to evaluate its seismic performance. The structure is made with bolted connections between all concrete elements (foundations, columns, beams and slabs), and the precast reinforced concrete solid slabs were designed to cover one 3.0×4.0 m grid field.

The slabs were designed with a constant height of 60 mm and three connection spots with two bolt holes along each of the four edges, as shown in Figure 7 a). The bolts were embedded in beams, protruding over the beam top in a sufficient length for a precast slab, a washer or a steel plate and a nut (similar to Figure 7 b)). The authors did not provide any additional information about the connection: no bolt type or diameter, nor any mention of bolt anchorage or hole sizes. The study conducted by Zhang et al. [31] demonstrated easy, fast assembly with no need for temporary support for all precast elements, but the demountability or reusability was not evaluated.

The test showed that the precast frame structure was essentially elastic with no cracks in the beams or columns under frequent earthquakes, and that the maximum inter-story drifts were within the limits. No cracks in precast floor slabs were reported, but no specific information about slab behaviour was provided. Based on the global behaviour of the tested structure, the authors of this paper can assume that the slab-to-beam connections provided effective transfer of horizontal forces to the frames. However, the behaviour of slab-to-beam connections is an important factor that needs to be systematically evaluated, considering the behaviour of bolts, the adopted tolerances, the failure mechanism, and the crack development.

Bolted protruded slab-to-beam connections were also proposed by Cai et al. [29] as suitable for reusability and easy demountability. The authors designed a ground-floor house for low- or moderate-seismic zones at the conceptual level, with all connections as demountable steel plates and bolts. Slabs were designed for the entire grid field, so no slab-to-slab connections were introduced, but only bolted slab-to-beam connections. The slab design was not presented in detail, and no slab connection testing was conducted. A push-out test on three concrete blocks connected with these bolted connections was, however, tested within this study (Figure 8). The results showed that after testing, assemblies reached their peak loads, and the specimens quickly lost their bearing capacity. The stiffness of bolted connections was lower than that of welded connections due to slipping, concrete crushing, and bolt deformation [29].

Similar to Cai et al. [29], Akduman et al. [30] proposed bolted slab-to-beam connections for one ground-floor demountable pilot house. The slabs (h=20 cm and L=5.45 or 6.0 m) were designed with different widths (200-235 cm) and without longitudinal connections between slabs (Figure 9). Each slab segment was designed with four corner square profiles (cross-section 50x50 mm and 200 mm in height) embedded to leave space for connectors (8.8-grade threaded bars, 24 mm in diameter). Slabs were connected to the beams with 80x80x10 mm steel square washers and nuts. The connector bars were placed in the corners of slabs with an edge distance of threaded rods 12 cm in the longitudinal direction, and 12 cm in the transverse direction. Rubber sheets were used to improve the transfer of force at the slab-beam connection surface. One slab (20x80x367 cm) was tested in this study in a standard three-point bending test, and only a brief description of the slabs' behaviour during testing was presented.

ONLINE FIRST

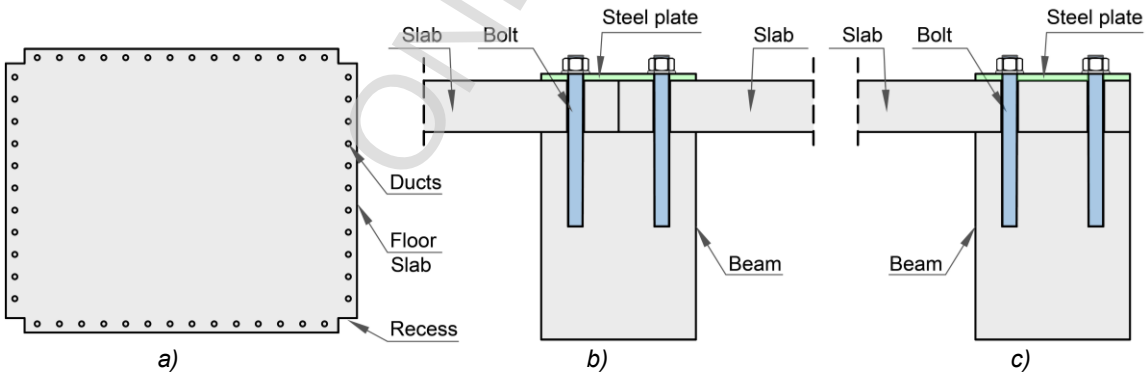

Figure 7. a) Larger slab segments that cover the whole grid field, with b) middle beam and c) edge beam connection - adapted from [23] [29] [30] [31]

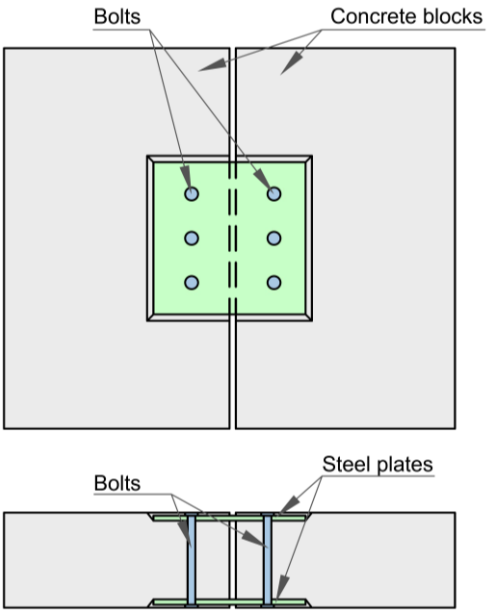

Figure 8. Bolted connection tested by Cai et al. [29]

The authors stated that no reduction in the bearing capacity of the tested slab was observed up to a deflection of 80 mm (the serviceability limit for deflection was 14.3 mm). During this test, the slab was connected to the supporting beams using two corner-threaded bolts, as described above. Rotation of the slab on the supporting lines was reported, but no information about the behaviour of threaded bars or slip in the steel square profiles was provided. No specific test results or validation criteria were presented, so no clear conclusions about the behaviour of this slab and its connections can be drawn. It remains unclear whether a 20-cm slab calibrated to meet deflection criteria at a 3.67 m span can satisfy the same criteria at a 6.0 m span.

Another conceptual idea for a slab-to-beam connection is presented by Almahmood et al. in [26]. The connection consisted of steel plates (or connectors) with ribs embedded in the slab and bolts protruding from the beam (Figure 10). This connection is easily demountable, but it requires more steel elements compared to previous types. The idea is presented as a concept, without any detail on geometry, tolerances, force transfer, reinforcement details, or connection behaviour.

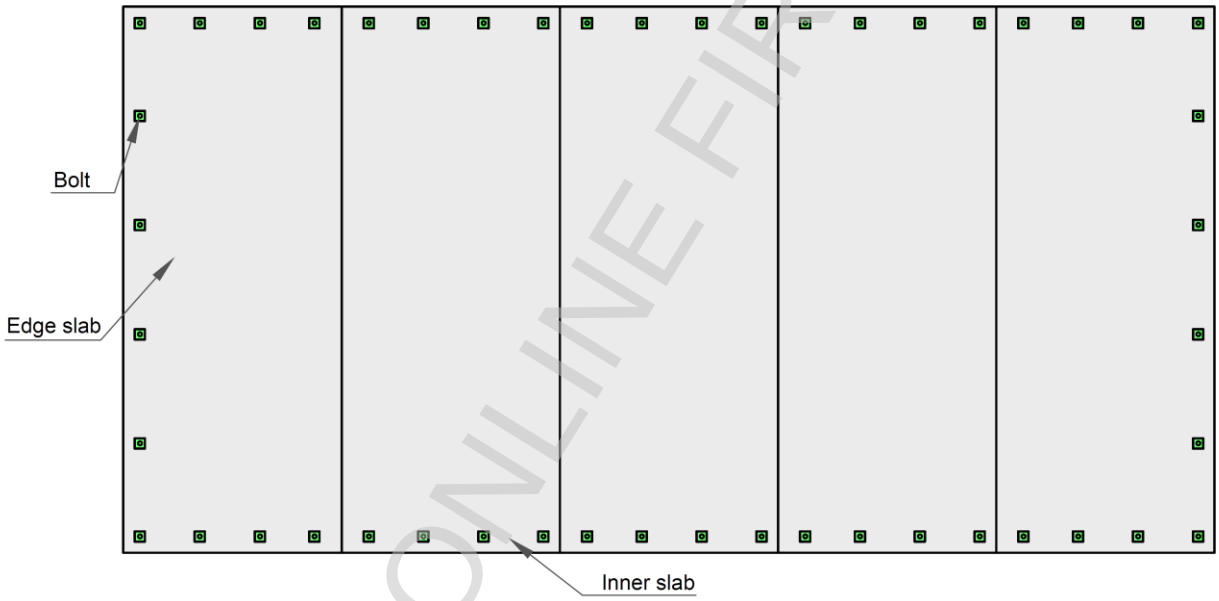

Figure 9. Connection concept for slab segments and beams – adapted from [30]

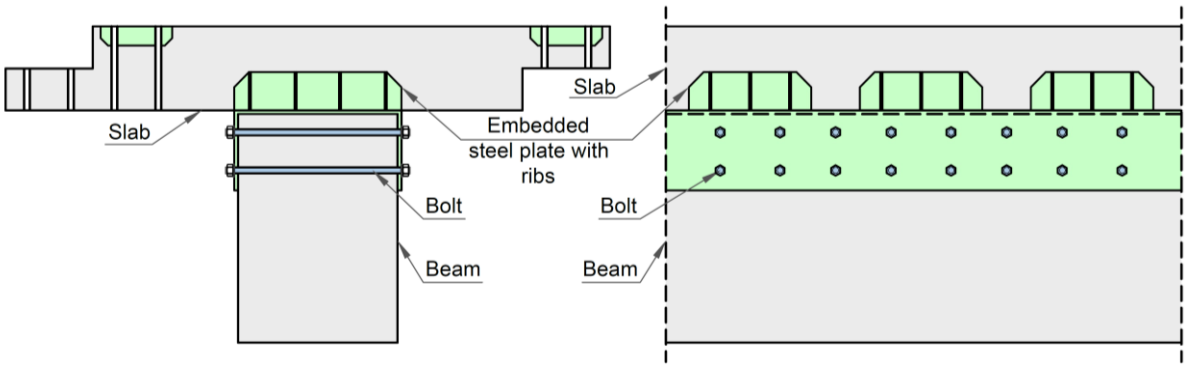

Figure 10. Slab-to-beam connection - adapted from [26]

ONLINE FIRST

One research study focused on explaining the behaviour of bolted plate slabs-to-beam connections under vertical loading [32]. Two precast concrete slabs were connected to a supporting beam with steel plates and post-tensioned bolts protruding from both slabs and the beam (Figure 11). Steel plates were positioned on top of the slabs and on the bottom of the beam, and connected with eight post-tensioned bolts. In this study, the assembly shown in Figure 11 was tested in a three-point bending test to induce vertical shear and bending in the connection. Steel plates used in this experiment were 40×20×1.5 cm; concrete slabs were 150×50×(10, 15 and 20) cm; the supporting beam was 50×(25, 35)×15 cm; and the bolts were Ø10, 16 and 20 mm. The holes for the bolts were designed with diameters 2 mm larger than the corresponding bolt sizes, and eight pipes matching the hole sizes were embedded in the slabs.

The influence of four parameters was analysed in this experiment: slab height, beam width, bolt diameter and post-tensioning force in bolts. The results showed that this connection can successfully transfer vertical shear forces and some bending moments. The capacity was lower compared to the monolithic slab, but the authors reported it can be up to 84% of the load-bearing capacity of fully monolithic structure. The capacity for horizontal shear forces was not analysed.

Some slab-to-beam connections, different from these bolt-and-steel-element types, have been analysed or presented conceptually in the available literature. A group of authors, Scalbi et al. [33], is developing a so-called “Cylinders Connection System concept” using cylindrical steel tubes as dowel-type shear connectors to transfer longitudinal shear force between two connected slabs [33]. This design is not presented in detail, and, to the best of the authors' knowledge, it has not yet been validated.

Another demountable solution for the concrete slab-to-beam connection was presented by Li et al. [34]–[36], and the connection concept is shown in Figure 12. This slab-to-beam connection was made with non-embedded high-strength bolted shear connectors to allow easy assembly and disassembly. A steel boxes (Q420 grade) were anchored to the beam, and a steel channel (Q355 grade) to the slab, both fixed with studs. The elements were connected on site using high-strength bolts, without embedding the bolts in concrete [36]. To evaluate the performance of this connection under shear, seven slab-to-beam assemblies were tested in a monotonic push-out test. Each specimen consisted of one beam block and two slab blocks, connected with 2x4 8.8-grade bolts in steel boxes on each side. All samples were designed with the bolt as the weakest link to ensure it fails first under loading, and to maintain the elastic behaviour of steel boxes and channels. The test investigated the influence of bolt diameter (M16, M20, and M24), outer wall thickness of the steel box (8 and 12 mm), channel spacing (150, 200, and 300 mm), and slab concrete strength (C20 and C40) on the behaviour of the connectors. Reusability was analysed by testing all samples across two life cycles. In the first cycle, the load was applied by a hydraulic jack under displacement control in three stages: preloading, service-level loading, and loading to ultimate failure. After failure, samples were reassembled and tested once more using the same loading protocol to simulate the second life cycle.

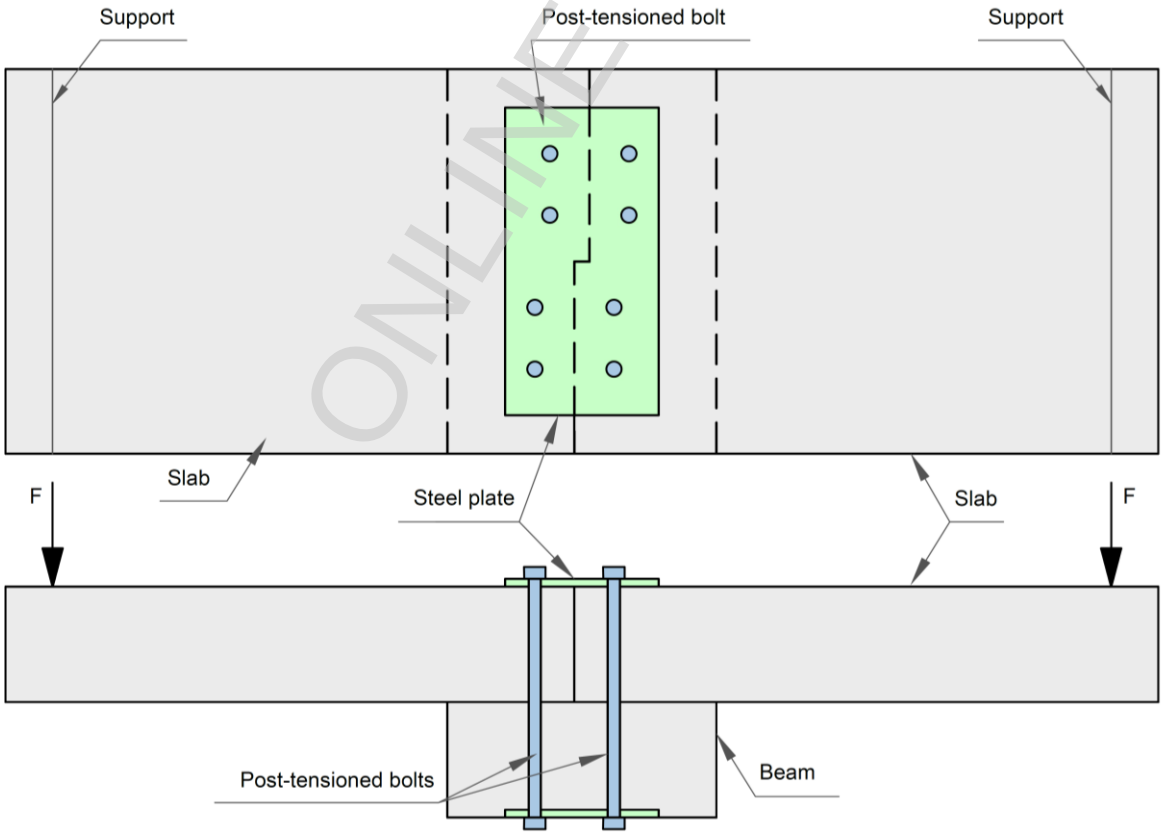

Figure 11. Slab-to-beam connection with post-tensioned bolts – adapted from [32]

ONLINE FIRST

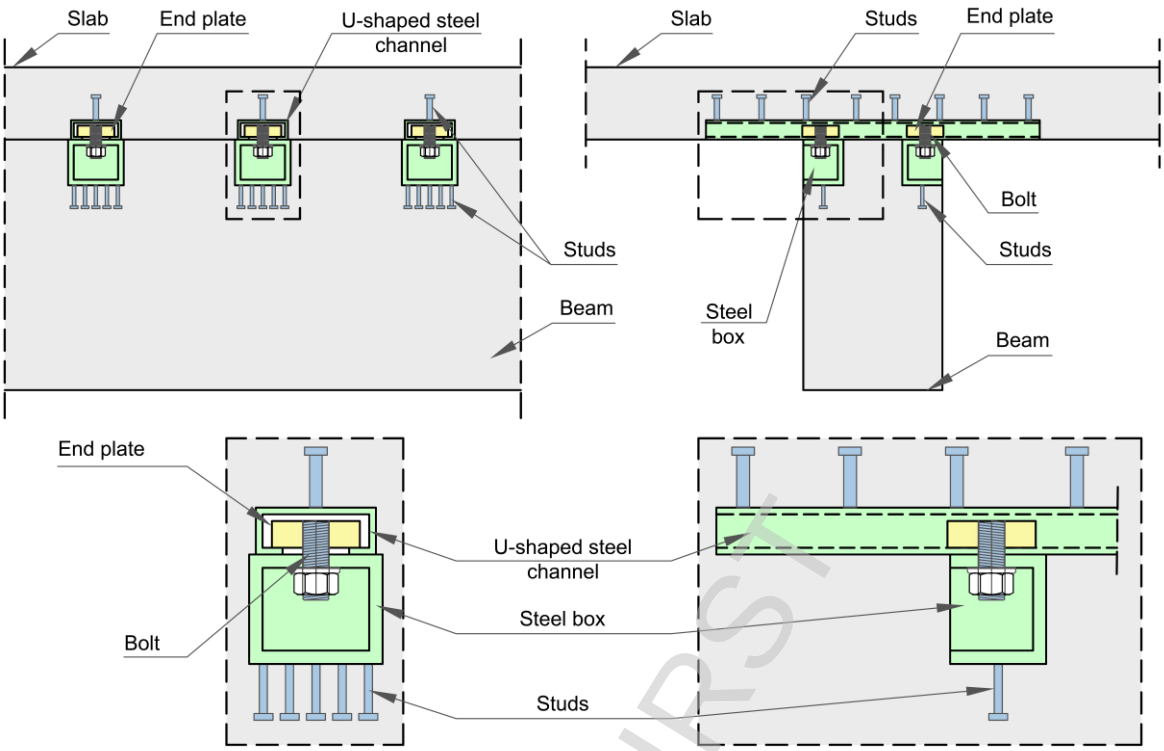

Figure 12. Demountable slab-to-beam connection with steel channels and boxes - adapted from [34]–[36]

Under increasing load, the connection behaved as follows: (1) the connection initially transferred shear by friction due to bolt pretension, (2) followed by a combined friction–bearing mechanism with progressive slip, (3) the bolt shear accompanied with localized concrete cracking, and (4) with all specimens ultimately failing by bolt shear fracture at the beam–slab interface while the concrete members, channel and steel box remained largely undamaged. Variations in bolt diameter, channel spacing, steel box wall thickness and slab concrete strength showed that: (1) larger bolt diameters and reduced channel spacing significantly enhance ultimate shear capacity (with some reduction in ductility for larger bolts), (2) increased box thickness improves capacity but may slightly reduce deformation uniformity, (3) whereas the influence of slab concrete strength on shear resistance is marginal for this setup. During the first loading cycle, the strain of the steel box and the channel remained below the yield strain limit. The disassembly torque measurements demonstrated that bolts can be safely loosened both at service load and after reaching ultimate capacity. The loosening torques were clearly lower than the initial tightening torques, yet still sufficient for adequate tightening under service loading, but low enough to permit practical bolt removal and replacement without damaging the concrete or steel components. In the secondary loading phase, the same specimens were reassembled with new bolts and subjected to the same displacement-controlled loading protocol. Based on the obtained results, Li et al. concluded the following: (1) the failure mode was still governed by bolt shear, (2) the initial slip loads showed minimal variations, (3) the ultimate shear capacity, initial stiffness and peak slip generally decreased by about 5–20% (depending on bolt diameter, channel spacing and box thickness). This study verifies good demountability, reusability and stable mechanical performance of the proposed connection under repeated loading cycles.

In the first loading cycle, all specimens reached ultimate slips larger than 6 mm (typically around 8–13 mm depending on the configuration), fulfilling the EN1994-1-1 [37] ductility criterion, while in the secondary loading, the corresponding ultimate slips remained above 6 mm but were reduced by roughly 5–20%, confirming that the connection still exhibits adequate deformation capacity after reuse. The observed reductions in stiffness and ultimate shear capacity under secondary loading can be attributed to accumulated damage and residual deformations in the steel box–channel region, and to microcracks in the concrete surrounding the connectors, which change the load-transfer mechanism despite the replacement of the bolts.

In addition to purely mechanical dry and semi-dry connections, alternative design-for-disassembly approaches have been proposed that rely on intentionally “weak” mortar joints. Halding [38] investigated lime–cement mortars in joints between HCS and walls, aiming to achieve sufficient in-service shear capacity for horizontal load transfer while facilitating joint removal at end-of-life. Experimental tests on low-strength mortars and a case-study wind analysis showed that selected lime–cement mixes can provide adequate performance during the service life, but their demountability still depends on specialised demolition techniques (such as hydro-demolition or flat jacks), highlighting a different trade-off between structural capacity, connection stiffness and practical disassembly compared to fully mechanical demountable connections.

ONLINE FIRST

3.2 Connections of monolithic concrete slabs cut for reuse

The feasibility of reusing existing cast-in-place concrete elements to create a new structure was demonstrated with two pilot projects in Switzerland: a 10-m-spanning post-tensioned segmented "Re:Crete" arch footbridge prototype, and a 233-m^2 parking pavement built with reused concrete walls and slabs [39]–[41].

Reusing cut cast-in-situ slabs for equivalent purposes is in its infancy, but one design-level solution for slab-to-slab and slab-to-beam connections is shown in Figure 13. These connections for the structural reuse of cut cast-in-situ slabs have not been experimentally verified in the existing literature, but the concept is well-known: bolted steel plates and angles. Cut reinforced concrete slabs are supported by 20-cm-wide steel angles installed on the walls with bolts, Figure 13 b). The slabs are placed on the supports previously topped with elastomer and fastened with through-bolts that pass through the full thickness of the slab and the angle leg [39]. Holes for these anchors need to be drilled in slab segments. Joints between two slabs are typically 2-cm wide and filled with mortar.

Two slab segments are also connected with a 25-cm-wide steel plate on the top side and post-installed anchors (Figure 13 a), ensuring transfer of lateral forces. This type of connection can be considered demountable, as steel elements can be unbolted and mortar joints hydro-jetted. This connection system is well-known for its clear force transfer and a straightforward design. There are numerous post-installed anchors available on the market that are demountable, but they will protrude above the slab surface. When considering bolt/anchor connections, important factors include concrete stresses in the vicinity of the mechanical connection. The distance between the anchor and the concrete edge should be analysed, taking existing slab reinforcement into account. Slabs and segments cut from existing structures will usually not have any additional reinforcement at the edges, but only top- and/or bottom-reinforcement mesh. An important aspect of bolted connections is also the tolerance, i.e., the hole diameter relative to the bolt diameter. Tolerances for bolted concrete elements are generally higher than those for steel structures, which can increase the potential for slip under horizontal loads. This should be considered during the design, or the holes should be filled with some epoxy material that allows easy demountability.

These types of slabs are generally intended for unidirectional one/span application in receiving structures, but it is possible to achieve slab continuity to some extent by strengthening the regions subjected to negative bending moments. In the structural model of the target building analysed in [7], reused slabs are assumed to be continuous over the walls. In these regions, a 20–35 mm layer of *Ultra-High-Performance Fibre-Reinforced Cementitious Composite* was applied to the upper surface of the slab to provide structural strengthening where required, ensure continuity at connections, and transfer tensile forces between slab elements. In this way, slabs would not be easily disassembled for further reuse after the second life cycle.

4 Discussion

The reviewed literature indicates that research on reusable concrete slabs and their demountable connections remains in its early stages, both in terms of the number of studies and the maturity of proposed solutions. Most concepts have been introduced at a preliminary or conceptual level, often without full detailing, design procedures, or systematic experimental validation across multiple life cycles. These connections were mostly inspired by precast concrete element connections with bolts or by steel element connections. However, this philosophy cannot be adopted without consideration of specific aspects related to reusability: precast concrete elements' tolerances can be higher compared to steel elements, and the holes shouldn't be grouted to ensure a dry connection; the behaviour of joints will change to some extent after the first life cycle, disassembly, transport and reassembly. The slab connections presented in this paper are divided into two major groups: connections for new precast slabs designed for reuse and connections for previously cut monolithic concrete slabs.

From a structural perspective, a central issue is the diaphragm behaviour of reusable slabs. Similar to untopped precast slabs, dry longitudinal joints and dry slab-to-beam or slab-to-wall connections introduce additional slip and flexibility, so a rigid diaphragm assumption cannot be taken for granted. For reusable systems, further reductions in stiffness arise from design choices made to facilitate demountability, such as segmenting slabs, avoiding cast-in-place toppings, and relying on simply supported spans. This combination directly affects in-plane stiffness, deformation

ONLINE FIRST

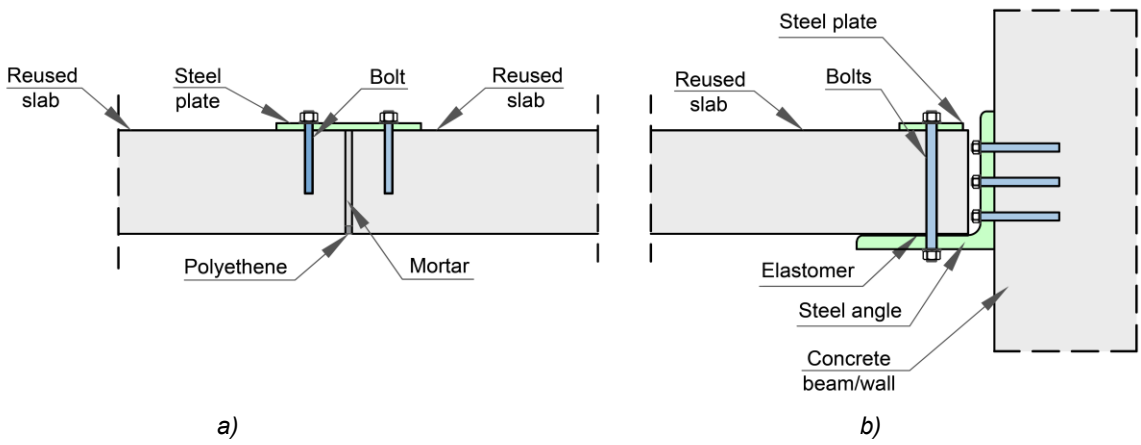

Figure 13. Cut slab segment connections: a) slab-to-slab, b) slab-to-concrete beam/wall [39]

compatibility, vibration characteristics and the distribution of horizontal loads. As a result, the classification of reusable slabs by rigidity becomes an explicit design task that should be based on quantified stiffness from experiments or reliable models, rather than analogy with monolithic floors.

Reusable precast concrete systems introduced in the 1970s demonstrated feasibility but are largely closed and lack accessible test data, restricting their wider, modular, and seismically robust application. More recent concepts for reusability focus on open, modular, and reusable systems with dry connections. Those solutions regarding slab connections are mostly at the conceptual level, or demonstrated in pilot projects without experimental testing, connection classification, or design recommendations. Slab connections for precast reusable slabs are mostly discrete types of connections. The tooth-saw concept is a continuous connection along the longitudinal edges of two slab segments, but it can only transfer horizontal shear forces; to transfer vertical shear forces, additional mechanical fasteners or other connectors are required.

Bolted connections with steel plates and angles are proposed by several authors, but no experimental analysis of those joints was conducted, leaving their bearing capacity, stiffness and influence on global floor behaviour unclear. Available experiments [30] confirm that bolted plate connections can transfer a significant portion of shear and bending loads, but with increased slip, rotations, and reduced stiffness compared to monolithic or welded solutions. Testing of the post-tensioned bolted joint by Baghdadi et al. [32] showed that its capacity can reach up to 84% of the load-bearing capacity of a fully monolithic structure, though the capacity for horizontal shear forces was not analysed. Overall, demountable slab-to-slab and slab-to-beam connections with bolts and steel plates or angles are technically feasible but not yet sufficiently validated and characterised for reliable design, with key aspects such as tolerances, slip, global diaphragm performance, and seismic behaviour remaining open.

Another discrete connection along the slabs' longitudinal edge with interlocking steel plates and elements was proposed by Chen et al. [28]. The absence of anchor plate design, edge distance analysis, and seismic testing means that the structural validity of this connection remains confined to a single in-plane shear mode under monotonic loading — a narrow basis for a system intended for multi-directional force transfer in real floor diaphragms. Until these gaps are addressed, the connection cannot be considered verified for practical use, and adopting it in seismic regions would carry unquantified risk.

The idea of mid-span slab-to-slab connections using bolts, plates, embedded steel blocks and shear keys was introduced by Almahmood et al. [26]. Achieving continuity and diaphragm action through in-span connections demands substantial additional steel and detailing effort, yet design rules, optimal reinforcement arrangements, and their influence on global slab behaviour — particularly diaphragm action and vibrations — remain unclear. As a result, current practical solutions for reusable slabs generally avoid in-span connections and rely on simply supported segments, sometimes combined with secondary steel beams, because these arrangements provide straightforward load paths and well-understood connections.

A unique solution for slab to beam connection was proposed by Li et al. [34]–[36]. To the best of the authors' knowledge, this is the only study to assess a demountable slab-to-beam connection over two distinct life cycles, which renders its findings especially influential despite the much broader scope of research that remains necessary. The observed degradation in shear capacity, stiffness, and slip performance demonstrates that first-cycle behaviour cannot be assumed to persist, and that systematic multi-cycle testing — particularly under seismic loading — must become a standard validation requirement for all dry mechanical connection types.

Reuse of cut monolithic slabs is technically feasible [39]; however, the connection concepts developed so far lack systematic structural validation. Key aspects such as design guidance for edge detailing, slip control, and long-term performance remain undeveloped, leaving the approach largely experimental. Furthermore, measures that ensure adequate continuity and diaphragm action often undermine future reusability. Addressing this issue is essential before cut monolithic slabs can be considered a dependable, demountable system.

A summary of connection and connector types, level of development and testing results in the first and second life cycle for studies presented in this paper is shown in Table 1.

ONLINE FIRST

Table 1. Qualitative presentation of connection types, level of development and testing results in the first and second life cycle for studies presented in this paper

Study [ref]	Joint	Connection type	Level of development	Test results – the first life cycle	Reuse validation – the second life cycle
[21], [22]	Flat slab-to-column	Bolted with steel plates	Practical demonstration	Not available	Potential reusability with no validation in the second life cycle
[23]–[25]	Slab-to-slab longitudinal connection	Bolted with steel plates	Conceptual level	No testing	Potential reusability with no validation in the second life cycle
[23]–[25], [29] [30] [31]	Slab-to-beam	Bolted with steel plates	Conceptual level	No testing	Potential reusability with no validation in the second life cycle
[23], [24]	Slab-to-slab longitudinal connection	Saw-tooth	Conceptual level	No testing	Potential reusability with no validation in the second life cycle

[26], [27]	Slab-to-slab mid-span connection	Bolted with steel plates and blocks, shear key	Preliminary testing	Lower ultimate loads, higher crack widths, and higher deflections	Potential reusability with no validation in the second life cycle
[28]	Slab-to-slab longitudinal connection	Interlocking steel plates of different shapes (teeth and connector interlock)	A monotonic steel connector tension test	A steel system can provide an in-plane shear transfer, but no connection testing	Potential reusability with no validation in the second life cycle
[29]	Slab-to-beam	Bolted protruded connections with steel plates	Connection testing on concrete blocks	Lower stiffness	Potential reusability with no validation in the second life cycle
[30]	Slab-to-beam	Bolted protruded connections with steel plates	Practical demonstration	No testing	Potential reusability with no validation in the second life cycle
[32]	Slab-to-beam	Steel plates and post-tensioned protruding bolts	Joint testing	Successful shear transfer and up to 84% of the monolithic structure's load-bearing capacity	Potential reusability with no validation in the second life cycle
[34]–[36]	Slab-to-beam	Non-embedded high-strength bolted shear connectors, steel boxes and channels	Monotonic push-out tests of slab-to-beam assemblies	Failure by bolt shear fracture with the concrete members, channel and steel box undamaged	After second life cycle testing, the ultimate shear capacity, initial stiffness and peak slip decreased by 5–20%
[39]	Slab-to-slab and slab-to-beam for cut monolithic slabs	Bolted with steel plates and angles	Conceptual level	No testing	Potential reusability with hydro-jetting mortar joints, but no validation in the second life cycle

ONLINE FIRST

5 Conclusions

The reusability of concrete elements has attracted significant attention in recent years as a possible practice that could shift the concrete construction industry toward sustainability. The idea of reusing concrete elements is currently being studied from market development to demonstration pilot projects. However, a comprehensive experimental analysis of the behaviour of connections between reusable elements was not conducted to an adequate extent for all connection types. This is currently one of the largest obstacles to broader practical implementation of concrete reuse. The authors sought to address this obstacle by analysing the current state of the art in reusable slab connections. Based on the analysis of available literature, the following conclusions regarding slab connections can be made:

– The proposed connection solutions between slab segments and slab-to-beam connections were mostly presented on the conceptual design level, with only a few experimental tests of the connection [28], or joints [26] [27] [32].

– Proposed solutions were mostly bolted connections made with threaded bars or bolts and steel plates or angles.

– All analysed connection solutions were dry connections that can be demounted, but the majority of studies did not validate the easy reusability of connected elements.

– Experimental tests in available literature showed that the bearing capacity and stiffness of dry reusable mid-slab bolted connections and bolted connections between concrete blocks [21], [32] are generally lower compared to the monolithic slab.

– Experimental testing of slab-to-beam connections using steel boxes, channels and bolts [34]–[36] showed that the ultimate shear capacity and initial stiffness decrease by about 5–20% after testing in the second life cycle, confirming that reuse should be validated through testing in both the first and at least the second life cycle.

– Reusable semi-dry connections for monolithic slab segments can be designed with bolts, steel plates, and angles, but no experimental validation is available in current literature.

The review of existing literature on slab-to-slab and slab-to-beam connections designed for reusability indicates a clear lack of systematic research in this area. Future studies should primarily focus on establishing a robust methodology for validating reusability. At present, the conditions under which slab elements can be safely reused remain insufficiently defined, as does their structural performance during a second life cycle, particularly under seismic loading. Furthermore, the stiffness of concrete slabs with reusable connections represents a critical parameter influencing the global structural response and therefore requires comprehensive and systematic investigation.

Acknowledgements

The authors would like to express their gratitude to the CircBoost – Boosting Circular Economy in Construction Industry, funded by the European Union under the Horizon Europe research and innovation programme (Grant Agreement No. 101082068) and Ministry for Education,

Science, and Technology, Republic of Serbia (Grant number 200092).

CRediT authorship contribution statement

Jelena Carević: Conceptualization, Methodology, Data curation, Visualization, Writing - original draft, Writing - review & editing.

Ivan Milićević: Conceptualization, Methodology, Writing - review & editing.

Milica Vidović: Visualization, Writing - review & editing.

Declaration of competing interest

The authors declare that they have no known competing financial interests or personal relationships that could have appeared to influence the work reported in this paper.

References

[1] L. Valentini, "Sustainable sourcing of raw materials for the built environment," *Mater. Today Proc.*, vol. 121, no. May 2023, pp. 427–430, 2023, doi: 10.1016/j.matpr.2023.07.308.

[2] A. Favier, C. De Wolf, K. Scrivener, and G. Habert, "A sustainable future for the European Cement and Concrete Industry Technology assessment for full decarbonisation of the industry by 2050," 2018, doi.org/10.3929/ethz-a-010025751

[3] C. Carroll, Y. A. de Souza, E. Salter, R. Hunziker, L. De Giovanetti, and V. Contucci, "Net-zero buildings: Where do we stand ?," 2021.

[4] C. Montano-Owen and J. Costa, "Creating local economies with complete cycling of concrete," 2025.

[5] J. Devènes, M. Bastien-Masse, and C. Fivet, "Reusability assessment of reinforced concrete components prior to deconstruction from obsolete buildings," *J. Build. Eng.*, vol. 84, no. June 2023, p. 108584, 2024, doi: 10.1016/j.jobe.2024.108584.

[6] I. Bertin, M. Saadé, R. Le Roy, J. M. Jaeger, and A. Feraille, "Environmental impacts of Design for Reuse practices in the building sector," *J. Clean. Prod.*, vol. 349, no. February, 2022, doi: 10.1016/j.jclepro.2022.131228.

[7] A. Parezanović, A. Nadaždi, D. Isailović, N. Višnjevac, and Z. Petojević, "Mapping the urban building stock for a circular economy by integrating GIS and BIM. A case study from Belgrade, Serbia," *Resour. Conserv. Recycl.*, vol. 215, no. November 2024, 2025, doi: 10.1016/j.resconrec.2024.108075.

[8] Z. Al-Faesly, "Feasibility of Reuse in the Concrete Industry," University of Ottawa, 2021.

[9] T. M. Fayyad and A. F. Abdalqader, "Demountable reinforced concrete structures : A review and future directions," *Civ. Eng. Res. Irel. 2020 Demountable*, pp. 218–222, 2020.

[10] *fib bulletin 43, Structural Connection for Precast Concrete Buildings*, International Federation for Structural Concrete, Lausanne, 2008. doi.org/10.35789/fib.BULL.0043.

[11] W. Zhao, S. Liang, R. Pang, X. Zhu, and Z. Zhou, "Experimental and numerical investigation on tension behavior of innovative untopped diaphragm connections," *Structures*, vol. 60, no. January, 2024, doi: 10.1016/j.istruc.2024.105892.

[12] R. Pang, Z. Xu, S. Liang, X. Zhu, and K. Hu, "Experimental and analytical investigation on the in-plane mechanical property of discretely connected precast RC floor diaphragm," *J. Build. Eng.*, vol. 32, no. September 2020, p. 101819, 2020, doi: 10.1016/j.jobe.2020.101819.

[13] R. Pang *et al.*, "Vibration behavior of innovative discretely connected precast concrete sandwich floors," *J. Build. Eng.*, vol. 82, no. March 2023, p. 108313, 2024, doi: 10.1016/j.jobe.2023.108313.

[14] H. Li and W. Zhou, "Behavior of new types of flange connectors of precast double-tees," *Struct. Des. Tall Spec. Build.*, vol. 31, no. 6, pp. 21–24, 2022, doi: 10.1002/tal.1922.

[15] R. Pang, C. Gao, X. Gao, Y. Sun, Z. Xu, and K. Xu, "Shaking table test and numerical analysis of an innovative precast reinforced concrete building structure," *J. Build. Eng.*, vol. 77, no. April, 2023.

[16] R. B. Fleischman, J. Restrepo, S. K. Ghosh, C. J. Naito, and R. Sause, "Seismic design methodology for precast concrete diaphragms part 1: Design framework," *PCI J.*, vol. 50, no. 5, pp. 68–83, 2005.

[17] ACI Committee 318, *Building Code Requirements for Structural Concrete: ACI 318-19*. American Concrete Institute, 2019.

[18] ACI-ASCE Committee 550, *Code Requirements for the Design of Precast Concrete Diaphragms for Earthquake Motions: ACI 550.5M-18*. American Concrete Institute, 2018.

[19] European Committee for Standardization, *Eurocode 8: Design of structures for earthquake resistance — Part 1: General rules, seismic actions and rules for buildings*. 2015.

[20] N. Widmer, M. Bastien-Masse, and C. Fivet, "Building structures made of reused cut reinforced concrete slabs and walls : A case study," in *Proceedings of The Eighth International Symposium on Life-Cycle Civil Engineering (IALCCE 2023), 2-6 July, 2023, Politecnico Di Milano, Milan, Italy*, 2023, pp. 172–179.

[21] H. W. Reinhardt, "Demountable concrete structures - an energy and material saving building concept," *Int. J. Sustain. Mater. Struct. Syst.*, vol. 1, no. 1, p. 18, 2012, doi: 10.1504/ijsmss.2012.050452.

[22] K. van Dijk, P. Boedianto, and A. Kowalczyk, "State of the Art Deconstruction in the Netherlands," *Overv. Deconstruction Sel. Ctries.*, p.95-143, 2000, [Online]. Available: http://www.irbnet.de/daten/iconda/CIB444.pdf.

[23] P. K. Aninthaneni and R. P. Dhakal, "Demountable Precast Concrete Frame–Building System for Seismic Regions: Conceptual Development," *J. Archit. Eng.*, vol. 23, no. 4, pp. 1–10, 2017, doi: 10.1061/(asce)ae.1943-5568.0000275.

[24] P. K. Aninthaneni and R. P. Dhakal, "Environment-friendly Demountable Precast Concrete Frame Building System for Minimization of Seismic Downtime," *16th Symp. Earthq. Eng.*, no. December, pp. 20–22, 2018.

[25] R. P. Aninthaneni, P. K. and Dhakal, "Demountable precast RC frame building system for seismic regions," in *Proceedings of the International Conference on Earthquake Engineering and Seismology (IZIIS-50), New Zealand*, 2016.

[26] H. Almahmood, A. Ashour, D. Figueira, and G. Yıldırım, "Tests of demountable reinforced concrete slabs," *Structures*, vol. 46, no. October, pp. 1084–1104, 2022, doi: 10.1016/j.istruc.2022.10.097.

[27] A. Ashour, D. Figueira, H. Almahmood, G. Yıldırım, A. Aldemir, and M. Şahmaran, "Demountable Reinforced Concrete Structures - A Way Forward to Minimize Energy and Waste in Construction Industry," *Lect. Notes Civ. Eng.*, vol. 349, pp. 72–80, 2023, doi:

ONLINE FIRST

10.1007/978-3-031-32519-9_6.

[28] P. Chen, J. Guo, and T. Chan, "Thin-Walled Structures Experimental and analytical investigation on the shear behaviour of a demountable interlocking connection applied in precast floor diaphragms," *Thin-Walled Struct.*, vol. 208, no. October 2024, p. 112696, 2025, doi: 10.1016/j.tws.2024.112696.

[29] G. Cai, F. Xiong, Y. Xu, A. S. Larbi, Y. Lu, and M. Yoshizawa, "A Demountable connection for low-rise precast concrete structures with DfD for construction sustainability-A preliminary test under cyclic loads," *Sustain.*, vol. 11, no. 13, 2019, doi: 10.3390/su11133696.

[30] S. Akduman, R. Aktepe, A. Aldemir, E. Ozcelikci, B. Alam, and M. Sahmaran, "Opportunities and challenges in constructing a demountable precast building using C&D waste-based geopolymer concrete: A case study in Türkiye," *J. Clean. Prod.*, vol. 434, Jan. 2024, doi: 10.1016/j.jclepro.2023.139976.

[31] R. Zhang, T. Guo, and A. Li, "Thin-Walled Structures Experimental investigation into demountable dry connections for fully precast frame structures through shaking table tests," *Thin-Walled Struct.*, vol. 201, p. 112014, 2024, doi: 10.1016/j.tws.2024.112014.

[32] A. Baghdadi, L. Ledderose, and H. Kloft, "Bolted steel plates for rigidly connecting decks to beams in precast concrete flooring systems," *Structures*, vol. 81, no. July, p. 110004, 2025, doi: 10.1016/j.istruc.2025.110004.

[33] A. Scalbi, M. van Mierlo, T. Lambrechts, M. Vullings, and S. Wijete, "Steel cylinder connectors for reversible precast concrete floors: the CCN case study," in *Circularity in the Built Environment: Proceedings of the 2025 conference*, 2025, vol. 6, pp. 167–186.

[34] W. Li, W. Chen, H. Jiang, and H. Su, "Flexural Behavior of Concrete Beam and Slab with Novel Demountable Connectors," *Buildings*, vol. 15, p. 2776, 2025, doi: 10.3390/buildings15152776.

[35] W. Li, W. Chen, X. Lin, L. Chen, H. Lv, and K. Shao, "Cyclic behavior and damage mechanisms of a demountable RC joint : Integrated experimental and analytical study," *Structures*, vol. 79, p. 109609, 2025, doi: 10.1016/j.istruc.2025.109609.

[36] W. Li *et al.*, "Experimental and numerical study on behavior of demountable shear connectors in sustainable reinforced concrete beam-slab," *Constr. Build. Mater.*, vol. 445, no. April, p. 137918, 2024, doi: 10.1016/j.conbuildmat.2024.137918.

[37] CEN/TC 250, *Eurocode 4: Design of composite steel and concrete structures — Part 1-1: General rules and rules for buildings*. European Committee for Standardization, 2004.

[38] P. S. Halding, "Design for Disassembly of Concrete Slabs with Mortar Joints", Buildings, 13(8), 1957, 2023, doi.org/10.3390/buildings13081957.

[39] C. Küpfer, N. Bertola, and C. Fivet, "Reuse of cut concrete slabs in new buildings for circular ultra-low-carbon floor designs," *J. Clean. Prod.*, vol. 448, 141566, 2024, doi: 10.1016/j.jclepro.2024.141566.

[40] J. Devènes, J. Brütting, C. Küpfer, M. Bastien-Masse, and C. Fivet, "Re:Crete – Reuse of concrete blocks from cast-in-place building to arch footbridge," *Structures*, vol. 43, no. February, pp. 1854–1867, 2022, doi: 10.1016/j.istruc.2022.07.012.

[41] C. Küpfer, M. Bastien-Masse, J. Devènes, and C. Fivet, "Environmental and economic analysis of new construction techniques reusing existing concrete elements: two case studies," *IOP Conf. Ser. Earth Environ. Sci.*, vol. 1078, no. 1, 2022, doi: 10.1088/1755-1315/1078/1/012013.

ONLINE FIRST